Wilson, D.M. 1964. *Anglo-Saxon ornamental metalwork 700–1100 in the British Museum.* London.
Worrell, S. 2006. 'Finds Reported under the Portable Antiquities Scheme', *Britannia* 37, 429–66.
Youngs, S. 2004. 'Lead alloy brooches' in Wallis, H. *Excavations at Mill Lane, Thetford 1995.* East Anglian Archaeol. 108, 38–40.

EXCAVATIONS AND SURVEYS IN NORFOLK IN 2007

edited by David Gurney *and* Richard Hoggett

This annual report comprises summaries of archaeological excavations, fieldwork and surveys carried out in Norfolk during 2007. It is often several years before post-excavation work on larger projects is completed and a full report is published, while many smaller projects are the subject of 'grey reports' for the client, the Local Planning Authority and the Norfolk Historic Environment Record (NHER) without further publication/dissemination. These summaries provide a useful guide to recent archaeological research in the county. The NHER is maintained at Gressenhall by Norfolk Landscape Archaeology and may be consulted by appointment (01362 869281 or smr.mus@norfolk.gov.uk. An online version of the NHER database, *Norfolk Heritage Explorer*, is available at http://www.heritage.norfolk.gov.uk.

Instead of providing a comprehensive list of all projects undertaken, as in previous reports, this year the content is more selective. Longer accounts are provided of excavations deemed to be more significant, with illustrations where possible. Information on these and other projects and 'negative' sites will appear on the Norfolk Heritage Explorer as soon as the data are entered onto the NHER and the NHE website is updated (around four times a year).

Barton Bendish, Spread Eagle Public House (NHER 51026, TF 71284 05711)

by Gary Brogan and Sophie Unger, Archaeological Solutions.

An evaluation for Parsons and Whittley revealed small-scale archaeological remains of three phases. One trench revealed the side of a pit or ditch containing early medieval pottery. Another produced a silted-up shallow cut which yielded Late Bronze Age to Middle Iron Age pottery, and substantial 18th–19th-century foundations of pitched chalkstone blocks. AS Report 2951.

Beetley, East Bilney Quarry (NHER 39348; TF 9625 1860)

by Sarah Bates, NAU Archaeology.

An archaeological strip, map and sample excavation was carried out for Middleton Aggregates Ltd ahead of quarrying. Four pits containing significant amounts of earlier Neolithic pottery and struck flint were discovered, along with several pits containing Iron Age pottery. Ditches which may be part of an Iron Age field-system were excavated, but cannot be securely dated. Towards the western end of the site a very heavily truncated Roman pottery kiln was discovered, along with two pits containing Roman pottery. In the north-eastern corner of the site, an Early Saxon sunken-featured building was excavated (Plate 1). Pottery, two ceramic spindle whorls, some fired clay, metalworking debris and a piece of copper wire came from its fill. NAU Archaeology Report 1686a (Interim), full report to come in 2009.

Binham, Binham Priory (NHER 2081; TF 9817 3994)

by Paul Cope-Faulkner, Archaeological Project Services.

Excavation at the 11th-century priory for WS Lusher & Son Ltd and the Norfolk Archaeological Trust examined an area immediately south of the gatehouse along a length of the precinct wall which collapsed in the 1980s. Foundations of the inner (eastern) face of the wall were revealed, but there was no corresponding evidence for the outer face. Levelling deposits, a chalk or mortar floor, a wall and a possible foundation trench, perhaps all medieval, were identified butting against the interior of the precinct wall. Post-medieval demolition deposits, probably related to the buildings indicated by the medieval chalk floors, were revealed, together with two buttresses. APS Report 116/07.

Plate 1 Beetley, East Bilney Quarry: Early Saxon sunken-featured building during excavation.

NAUA

Brancaster, Tranquillity, Marsh Lane (NHER 50282; TF 7792 4417)

by Thomas Bradley-Lovekin, Archaeological Project Services.

Development immediately adjacent to the scheduled remains of the Roman fort and *vicus* of *Branodunum* was the subject of a watching brief for Thomas Faire Architects. Several ditches were revealed, with one containing an assemblage of early–mid-2nd-century Roman pottery. The other ditches were undated, but unstratified Roman pottery recovered close to one of them suggests a similar date. This dating is of note as it contrasts with the results of previous investigations which have suggested that occupation of the fort and *vicus* commenced in the late 2nd century. APS Report 82/07.

Caistor St Edmund, the Roman town of *Venta Icenorum* (NHER 9786; TG 2306 0345)

by William Bowden (University of Nottingham) and Dave Bescoby (University of East Anglia).

Following a pilot study in 2006, geophysical survey was carried out across the entire walled area of the Roman town of *Venta Icenorum* in spring 2007. The new survey used a cart-mounted Scintrex SM-5 NAVMAG Caesium vapour magnetometer coupled with a sub-metre GPS to give immediate position guidance. In total over 13 ha of ground was surveyed. The survey resulted in a complete plan of the walled area of the town (Figs 1 and 2), of which a number of elements can be highlighted. The results of the survey are published in full elsewhere (Bowden, W. and Bescoby, D. 2008, 'The plan of Venta Icenorum: the results of new geophysical survey', *Journal of Roman Archaeology* 21).

The origins of *Venta Icenorum* remain unclear, although it has been suggested that the town lies on the site of a substantial Iron Age settlement and a Roman fort of Neronian–Flavian date. One of the more important aspects of the geophysical survey was, therefore, the identification of a number of circular and sub-circular anomalies, including gullies and ring-ditches apparently truncated by some of the Roman streets and buildings. This is particularly noticeable in the case of the large circular feature in the north-eastern corner, which appears to be bisected by the large road that runs diagonally in relation to the rest of the street grid. These features were visible in many parts of the site, although they could be seen particularly clearly on the northern and eastern sides. They vary in size between 5m–40m across.

The presence of these features supports strongly the argument that there was a significant pre-Roman presence on the site, although the chronology, extent and nature of this occupation are unknown. The larger anomalies are reminiscent of the ring-ditches discovered around the Bronze Age barrows at Harford Farm *c*. 800m to the north. No obvious trace was found of the early Roman military installation suggested by metalwork finds and the triple ditches revealed by aerial photographs to the south and east of the site. However, in the area of the pottery kilns excavated by Atkinson on the northern side of the walled area a number of anomalies were detected which are also likely to represent kilns.

As might be expected, the survey produced a clear plan of the streets of the Roman town. Major public buildings can be seen, with the forum, temples and baths known from Atkinson's excavations revealed with particular clarity. The survey suggested that masonry structures were concentrated along the principal axial streets. With the exception of the *insula* containing the forum and the small *insula* containing the temples, all the *insulae* appeared to have significant open areas and large parts of the walled area (particularly in the north-western quarter) were apparently sparsely occupied during the Roman period. In addition to the public buildings excavated in the 1930s, a possible theatre was noted. This was indicated by two concentric semi-circular anomalies directly to the east of the two temples excavated by Atkinson. While these anomalies are ambiguous, their interpretation as a theatre is lent weight by their proximity to the two temples (a characteristic location for Romano-British theatre).

The Roman street grid produced a wide range of anomalies of varying size, suggesting that the streets were rebuilt and altered over time, with streets in the central areas producing stronger signals, suggesting successive resurfacing. The streets are also less regular than they appear on most published plans of the site, with the *decumanus maximus* in particular showing signs of numerous slight changes in alignment. The streets

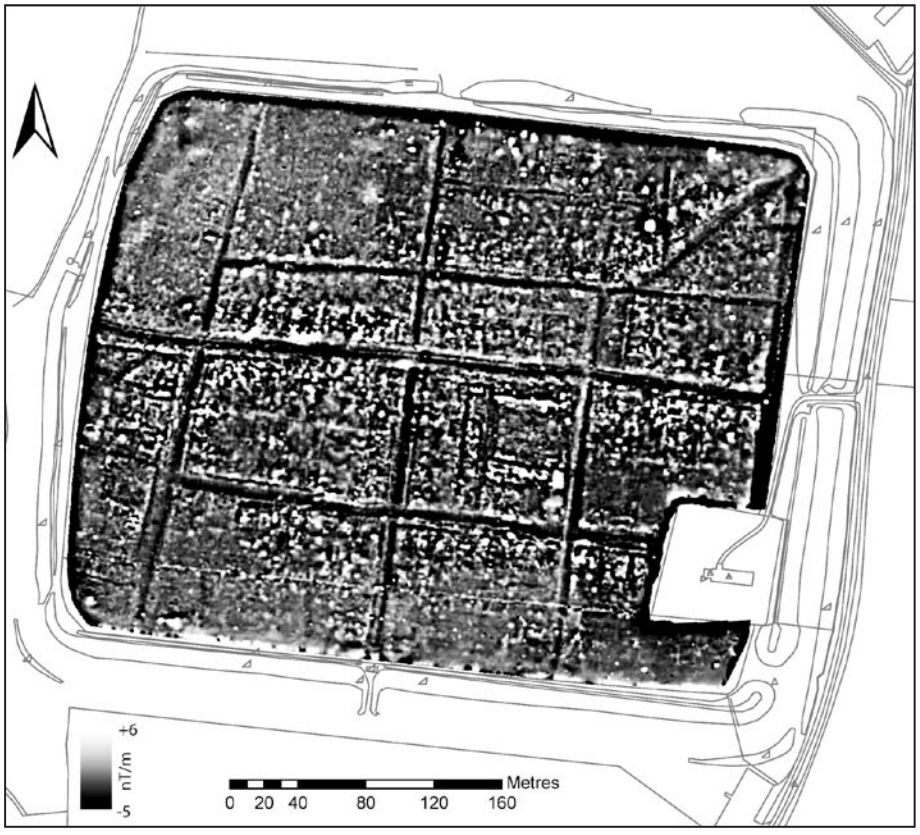

Fig. 1 Caistor St Edmund, *Venta Icenorum*: geophysical survey results.
Caistor Roman Town Project

vary dramatically in width, with the westernmost street measuring almost 20m across adjacent to the bathhouse. The survey also revealed a long line of very strong ferrous anomalies running to the east of the *cardo maximus*. These are almost certainly the iron collars which joined the wooden water pipes that were probably housed in brick-lined channels. Such collars were noted in excavation to the north of the town in the 1930s. It is likely that this line represents a main water supply, fed from a spring to the north-east. A series of channels in the streets, partly visible on the aerial photographs and presumably for drainage, also showed up clearly.

The survey revealed possible post-Roman occupation in the form of a large sub-rectangular enclosure (or enclosures) that clearly cuts the metalling of the Roman street in the north-western corner of the site. Possible sub-rectangular structures are visible within these enclosures. The discovery of more than 30 Middle Saxon coins and metalwork mainly to the west of the site, the presence of two Early Saxon cemeteries in the vicinity and a significant Middle Saxon cemetery at Harford Farm suggest that these enclosures may be associated with post-Roman occupation of the town.

Earsham, Pheasants' Walk, Earsham Quarry (NHER 44609; TM 315 891)

by Matthew Adams, Shannon Hogan and Sophie Unger, Archaeological Solutions.

The second phase of excavation for Earsham Gravels Ltd involved the stripping of topsoil bunds left *in situ* during phase one. One Early–Middle Iron Age pit was discovered in close proximity to a cluster found previously. The alignment of two post-medieval ditches was confirmed. Other features included six unphased pits, one of which contained a small amount of human bone, perhaps associated with the Bronze Age cremation pits found during earlier work. AS Report 2174.

East Rudham, Coxford Abbey Quarry (NHER 41273; TF 83172 30249)

by Phillipa Sparrow and Rick Greene, Archaeological Solutions.

Further fieldwalking survey and excavation for Longwater (Gravel) Co. Ltd revealed three phases of prehistoric activity. The Early Neolithic was represented by a series of clustered and paired pits, indicative of domestic structures. Possible

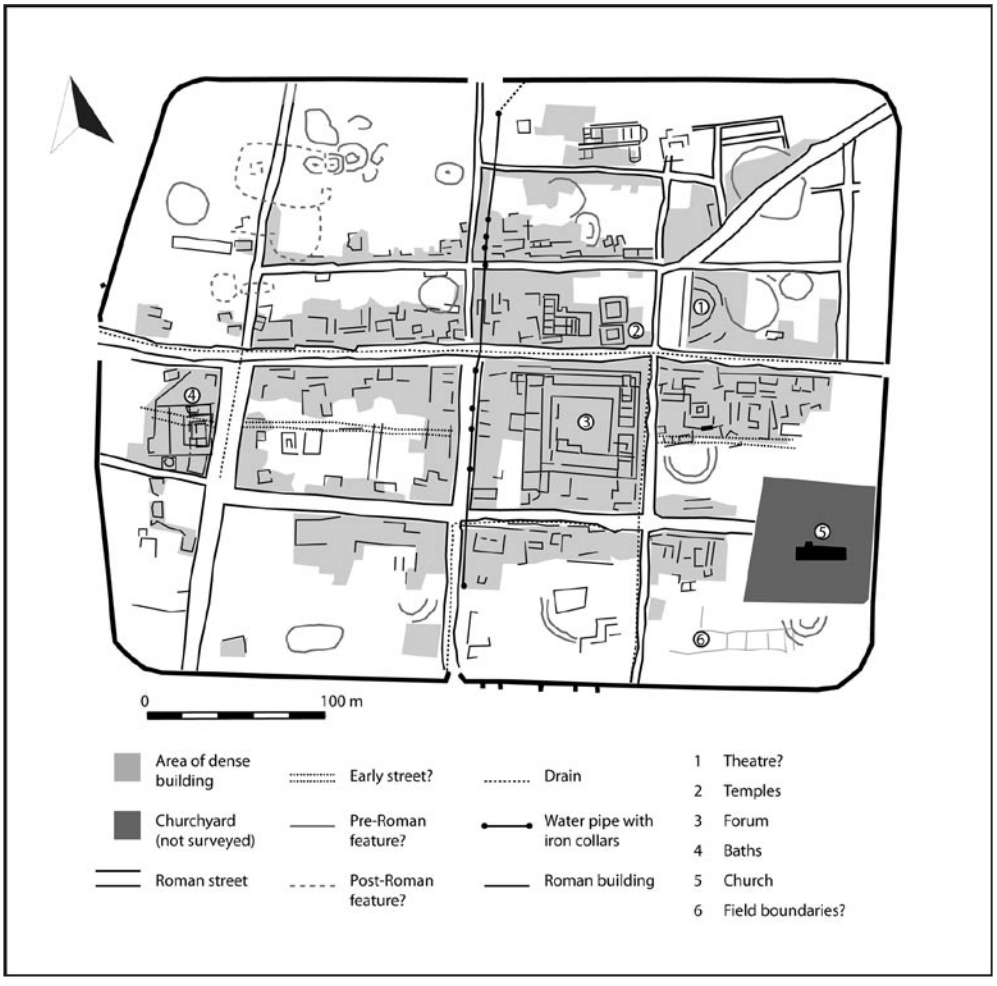

Fig. 2 Caistor St Edmund, *Venta Icenorum*: geophysical survey interpretation.
Caistor Roman Town Project

symbolic activity was revealed in the form of deliberately broken and recycled axes, with a concentration of cereal grain discovered in the same pit. The Early Iron Age was represented by a single natural feature with one fill containing pottery. The final phase was Roman, with finds from a pit and a gault hole indicating small-scale, temporary use of the site. AS Report 2954.

East Winch, Fosters End Drove, Blackborough End (NHER 37413; TF 6840 1520)

by Jon House and Chris Pole, Archaeological Solutions.

Further excavation for Middleton Aggregates Ltd revealed multi-period remains, after three previous phases of excavation at the site had explored evidence for Middle Iron Age, Roman and post-medieval activity. Work in 2007 revealed two isolated pits, one Iron Age and one medieval. Five tree throws were discovered and tentatively dated to the Roman period. The continuations of post-medieval Parliamentary Enclosure ditches were also encountered. This excavation confirmed the low-level Middle Iron Age activity at the site, although the considerable Romano-British remains seen in earlier phases did not continue into this latest area. AS Report 2870.

Great Fransham, All Saints' church (NHER 4206; TF 8980 1310)

by Peter Crawley, NAU Archaeology.

An archaeological excavation was carried out for Nicholas Warns Architect Ltd ahead of new drainage works in the churchyard. A wall uncovered during the work was almost certainly part of a separate building known from previous drainage operations in 2002. A layer of possible foundation material, which may once have supported the wall of the south aisle of the church, was also revealed. NAU Archaeology Report 1438.

Gooderstone, The Street, Church Farm (NHER 49731; TF 7619 0216)

by Shannon Hogan, Phil Weston and Andrew Mundin, Archaeological Solutions.

Evaluation for The Samuel Roberts Trust revealed Anglo-Saxon remains including a ditch, pit and cultivation soil. Medieval ditches, pits and buried soil are likely to represent property boundaries and backyard activity. The Anglo-Saxon and medieval remains were sealed by post-medieval made ground and yard surfaces associated with 19th-century farm buildings. AS Report 2161.

Great Yarmouth, Gorleston, Priory Street, (NHER 49738; TG 5262 0478)

by Chris Birks, Chris Birks Archaeological Services.

An archaeological evaluation by trial trenching was carried out for Watson Builders in December 2006 and reported upon in 2007 prior to proposed residential development of the site. Excavations have shown the presence of *in-situ*, though highly disturbed, remains of an 11th–14th-century burial ground. This almost certainly relates to the church of St Nicholas, known to have stood *c*. 50m to the north-east. Some of the disturbance had evidently been caused by the excavation of a modern ditch, and the construction and capping of a well.

At least seven individuals were represented in the human bone assemblage and the estimated heights of some of the individuals were considerably above average for similar early medieval populations. There was also tentative evidence for family burials. Of particular note is the burial of an adult female, seemingly with the remains of an infant (perhaps indicating death in childbirth) and the disturbed remains of a juvenile at her side (Fig. 3). The presence of iron nails suggests that coffins were used. Chris Birks Archaeological Services CB038R.

King's Lynn, Austin Street (NHER 51102; TF 6203 2034)

by Chris Birks, Chris Birks Archaeological Services.

An archaeological evaluation by trial trenching for Marten Properties (Sussex) Ltd recorded evidence for medieval and post-medieval settlement, indicated by a late medieval/early post-medieval domestic waste pit, a post-built structure, pottery and clay-pipe stem fragments. The timber structure dated from the post-medieval period and was almost certainly a temporary structure. This site lies to the north-west of a nationally important site that has produced evidence for cottage industries, including the manufacture of fishhooks, woodworking and, later, horn-working. There is evidence indicating that settlement has existed along Norfolk Street since the mid-12th century, so the lack of similar remains at this site is notable. The reasons for this absence of remains is unknown, but it may be due to considerable modern intrusions on this site or simply that this area was largely unused. Chris Birks Archaeological Services CB088R.

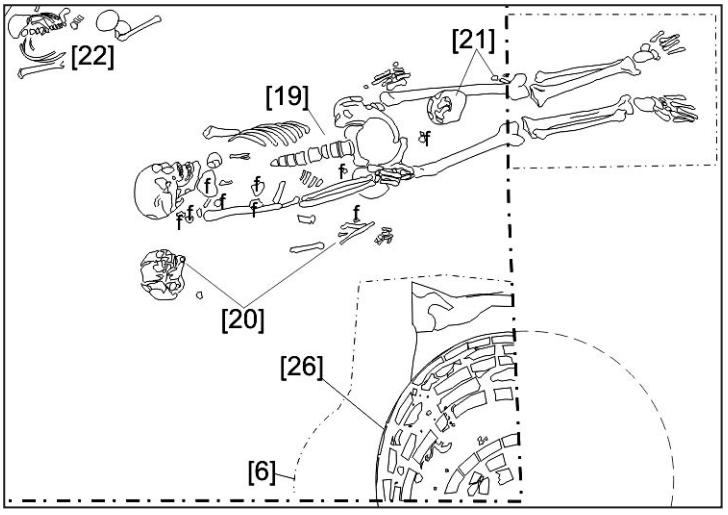

Fig. 3 Great Yarmouth, Gorleston: the burial of an adult female [19], with associated infant [21] and juvenile [20] burials.
Chris Birks Archaeology

King's Lynn, Greyfriars (NHER 5477; TF 6201 1978)

by Paul Cope-Faulkner, Archaeological Project Services.

Investigations for King's Lynn and West Norfolk Borough Council in the precinct of the medieval Franciscan friary, founded in the mid-13th century, indicated that dumped deposits were used to consolidate the ground prior to the construction of the friary. Parts of the nave, north aisle, choir, Chapter House and eastern range of the cloister were identified. Additionally, further buildings, including a vaulted undercroft, were revealed east of the cloister. Brick foundations for the choir stalls were apparently constructed over a sounding chamber. In the early post-medieval period the nave, and possibly the presbytery, were demolished, although other parts of the friary, including the Chapter House, survived into the 17th century. Domestic buildings were constructed on the street frontage in the 18th century. APS Report 34/07.

King's Lynn, The Shrubbery, Blackfriars Road (NHER 42824; TF 6226 2027)

by Giles Emery, NAU Archaeology.

An archaeological evaluation was carried out for Mr Phil Bone. Two trenches revealed Late Medieval riverine deposits at the street frontage and a Late Medieval ditch further to the east. This ditch may mark the edge of a building plot extending from a medieval street frontage along Littleport Street. A 19th-century brick culvert was also revealed. This subterranean tunnel was constructed in order to carry water from a covered reservoir to the south of the site to a channel on the northern side of Littleport Street. NAU Archaeology Report 1260.

Leziate, Holt House Farm (NHER 38183; TF 681 181)

by Steve Malone, Archaeological Project Services.

Archaeological monitoring of an 8ha area on behalf of WBB Minerals revealed evidence for domestic occupation and industrial activity ranging from the late Bronze Age to the late Iron Age and Roman periods.

In the west of the site a series of pits yielded a remarkably consistent assemblage of late Bronze Age post-Deverel–Rimbury plain wares. This is an interesting collection for this area, probably representing debris derived from a nearby settlement. The good condition of the material suggests that it had not travelled far before deposition.

Evidence for iron-smelting was also recovered. Two or three furnaces are suggested, but only the very base of the structures survived. The clearest evidence was the quantity of slag deposited in pits nearby. Radiocarbon dates from organic material encased in the slag give a date in the 4th–3rd century BC.

Further east, on a slight rise, lay an area of 50+ pits enclosed by an irregular curving ditch. Many of the pits had charcoal-rich fills and some showed evidence for burning *in situ*. The pottery assemblage from the pits is typical of many later Iron Age assemblages from Norfolk, but also includes barrel-shaped vessels and La Tène decorated sherds, probably from a single vessel but distributed through the fills of the three pits. La Tène decoration is rare in Norfolk, having been found on only two other sites, both in the north-west of the county. The barrel-shaped vessels are also unusual, being more commonly found in Lincolnshire and northern Cambridgeshire. It is possible that these vessels represent imports into Norfolk from areas to the west of the county, perhaps indicating a trade or social network linking the site to areas to the north and west. Little structural evidence was identified, although burnt daub within pit fills presumably derives from structures in the immediate vicinity. APS Report in preparation.

Plate 2 Little Melton, Water Treatment Works: strip, map and sample excavation from the air. Anglian Water

Little Melton, Anglian Water Water Treatment Works (NHER 50209; TG 1670 0770)

by Peter Watkins, NAU Archaeology

A fieldwalking and metal-detector survey and a strip, map and sample excavation were carried out for One Alliance prior to the construction of a new water treatment works. Although the fieldwalking and metal-detector survey produced largely negative results the excavation revealed extensive archaeological remains (Plate 2). These include numerous interlinked ditched enclosures and a variety of pits and postholes, virtually all of which appear to be early Iron Age. Several human cremation burials were also potentially of Iron Age date.

The form of the enclosures strongly suggests that they were associated with stock management, a conclusion supported by the limited environmental evidence that could be recovered. The pits and postholes are likely to have been associated with nearby settlement activity, although no clear structures could be identified. These features produced a substantial pottery assemblage as well as evidence relating to a range of activities including textile production and metal-working. NAU Archaeology Report 1511a (Assessment), full report to come in 2009.

Marham, The Old Bell (NHER 49785; TF 7084 0979)

by Shannon Hogan and Chris Pole, Archaeological Solutions.

An evaluation for Veltshaw Builders Ltd revealed two phases of archaeology. The Late Saxon/Saxo-Norman to early medieval periods were represented by numerous pits and ditches constituting roadside activity, possibly relating to the development of the village. Phase Two dated from the post-medieval and modern periods and comprised walls, a floor and made-ground, which were also likely to represent roadside activity along Church Lane. AS Report 2171.

Norwich, Anglia Square/Botolph Street (NHER 50581, 50582, 50583 and 50584; TG 2298 0941)

by John Percival and Suzanne Westall, NAU Archaeology.

An archaeological evaluation was carried out for Centenary Ashcroft LLP prior to the proposed extensive redevelopment of

Anglia Square and its environs. Nine trenches were excavated to the north and west of Anglia Square, in the vicinities of Pitt Street, Botolph Street and Edward Street. The Late Saxon defensive ditch was found, as well as evidence of occupation on the St George's Street and Pitt Street frontages.

Cultivation features found in the south of the area examined probably related to Cherry Ground, an area of open land that was not built on until the late 18th century. In the far north of the area examined, only evidence for Victorian and 20th-century structures was found. This area had been part of St Margaret's Croft, which remained largely undeveloped until the 19th century. NAU Archaeology Report 1538.

Norwich, Cathedral, The Hostry (NHER 39455; TG 2344 0886)

by David Adams, NAU Archaeology.

An archaeological excavation was carried out for Norwich Cathedral prior to the construction of a new Visitors' Centre at the site. Traces of Anglo-Saxon occupation were found on the site in the form of a possible Late Saxon sunken-featured building and associated pits and post-holes. This building adds to the number of such structures discovered in this area of the city in recent years. A kiln or oven, which may also belong to this phase, was also discovered.

The site on which the Hostry was built was levelled before its construction and the flint foundation stones were laid directly onto the natural sand. The excavation revealed walls relating to the Romanesque Hostry and associated western range. After the riot of 1272, which destroyed the original Hostry, the range was rebuilt and extended. Substantial remains of the 13th-century building were revealed, including the western wall of the range, an associated porch, a drain and a number of east–west internal walls. Evidence for fires caused by the riot were identified where reused stones showed a pink hue indicative of intense heat. The walls themselves were substantial, being up to 1.5 metres thick, and this was necessary to support the large open-plan hall and the two-storey chambers at the northern and southern ends of the range.

The Hostry is known to have been destroyed in 1562, but the excavation suggested that some elements of the building continued in use beyond this time. The southern chamber appears to have been used as a stonemason's yard for a while. Parts of the medieval range are still visible above ground, such as the eastern wall with its row of circular, double-splayed windows, and the arch on the line of the west wall of the Hostry.

Archaeological evidence was also revealed for a 16th–century building, known to be a residential house of quite substantial size owned by one Dr Baret. This house was demolished in 1863, when it was refashioned into the Locutory to house the choir school and provide a neater western façade.

Some late post-medieval garden features which linked the archway in the western wall and the doorway in the eastern cloister wall were also revealed. Two medieval stone coffins were moved and re-buried on the site during this period (Plate 3). Both of these coffins contained almost intact skeletons.

NAU Archaeology Report 1266 (Assessment), full report to come in 2009.

Norwich, Duke Street, St Mary's Works (NHER 51027; TG 227 092)

by Mark Holmes, Northamptonshire Archaeology.

Archaeological evaluation for Steeple Court plc revealed a consistent pattern across most of the site of medieval rubbish and quarry pits sealed by an homogenous 15th/16th-century garden soil. Medieval buildings were notably absent, suggesting either discontinuous frontages or that they lay beyond the current footprint. Buildings of 18th- and 19th-century date were cut into these soils, and all deposits were later truncated by the 1926 shoe factory. Among the finds is a possibly unique bird-shaped pottery lamp (Plate 4) or salt in Grimston Ware. Northamptonshire Archaeology Report 08/046.

Plate 3 Norwich, Cathedral Hostry: excavation of a redeposited medieval sarcophagus and burial. NAUA

Plate 4 Norwich, Duke St, St Mary's Works: bird-shaped pottery lamp or salt in Grimston Ware.
Northamptonshire Archaeology

Norwich, Duke Street, Former Eastern Electricity Offices (NHER 49778; TG 2286 0880)

by David Adams, NAU Archaeology

Archaeological window sampling was carried out for Garth Hanlon. Peats and organic muds were found to be widespread across the site, overlain by archaeological remains. It would appear that the site was used for the disposal of rubbish and debris from the Late Saxon period onwards. Within this probably *ad-hoc* disposal, a deliberate and organised approach to reclamation and consolidation is indicated by the presence of chalk rafts. The presence of ash and burning debris within some deposits might be indicative of industrial activity in the vicinity. NAU Archaeology Report 1249.

Norwich, Duke Street, Former Eastern Electricity Offices (NHER 49778; TG 2286 0880)

by Giles Emery, NAU Archaeology.

An archaeological evaluation was carried out for Targetfellow Group Ltd. Evidence for Saxo-Norman chalk quarrying was identified at the rear of the site and further activity was discovered closer to the river, including a well-preserved timber structure that may have been a walkway close to the Saxon foreshore (Plate 5). Numerous well preserved leather off-cuts were collected from a Saxo-Norman riverine deposit.

Large numbers of 13th- to 14th-century pits were discovered in two locations on the site. The foundations of two 15th-century stone buildings were revealed just below the modern make-up in two trenches. Brick foundations and preserved rail-lines which once formed part of the Bullard's Anchor Brewery were revealed in the western area of the site. NAU Archaeology Report 1324.

Norwich, Proposed route of the Northern Distributor Route (TG 1417 1565 – TG 2891 0844)

by Gary Trimble, Peter Watkins, Stephen Morgan and Richard Hoggett (NAU Archaeology), David Sabin and Kerry Donaldson (Archaeological Surveys).

A programme of fieldwalking and metal-detecting was carried out for Norfolk County Council Planning and Transportation Services along the proposed route of the Norwich Northern Distributor Route, which passes through several parishes to the north of Norwich. Sites identified along the route included: surface scatters of prehistoric worked flint (NHER 49747, TG 1821 1537; NHER 28620/49747, TG 2623 1416) and burnt flint (NHER 50495, TG 1574 1575; NHER 41874, TG 2853 1178); a surface scatter of Roman pottery (NHER 50504/49757, TG 2912 0905); dense clusters of post-medieval metalwork thought to be indicative of temporary markets (NHER 49745/49746, TG 2218 1458; NHER 49758, TG 2917 0874); and a WW2 aeroplane crash site (NHER 50493, TG 1512 1558).

A geophysical survey was carried out over 11.8ha of land at the eastern end of the proposed route. The survey located a number of magnetic anomalies, some of which may relate to possible archaeological features. A positive curvilinear anomaly may represent a ring-ditch containing a central pit-like feature, but this is a tentative interpretation (NHER 49758, TG 2930 0868). A number of positive linear anomalies have also been located which may represent cut features associated with former land boundaries (NHER 50502, TG 2851 1182).

Targeted trial trenching along the proposed route took place following the completion of systematic fieldwalking, metal-detecting and geophysics. Three sites were investigated where significant cropmarks have been identified within the proposed road corridor: a series of enclosures and other linear

cropmarks were shown to be predominantly medieval, with a possible Roman phase (NHER 30315, TG 1660 1579); a rectangular cropmark enclosure was found to be probably Bronze Age (NHER 18131, TG 1790 1550); and trial trenches failed to locate the ditch of a second cropmark enclosure, presumably destroyed since the photographs were taken (NHER 18126, TG 1907 1483).

Trail trenches targeting a dense cluster of post-medieval metalwork located during metal-detecting did not produce any evidence for the suspected market site (NHER 49745, TG 2218 1458). Two other fields which had produced relatively large collections of fieldwalked material were also evaluated, but no archaeological evidence was recovered from either field (NHER 41884, TG 2532 1425; NHER 41874, TG 2543 1440). A single trench was placed across the projected line of a Roman road which supposedly ran through NHER 41874, but no evidence for the road was found, although it is possible that any remains may have been destroyed by ploughing.

Trenches were placed in two locations where the geophysical survey identified of sub-surface remains. Trenching confirmed the existence of a substantial ditch which appeared as a circular anomaly in the magnetometer survey and is

Plate 5 Norwich, Duke St, former Eastern Electricity Offices: remains of a Saxo-Norman timber walkway. NAUA

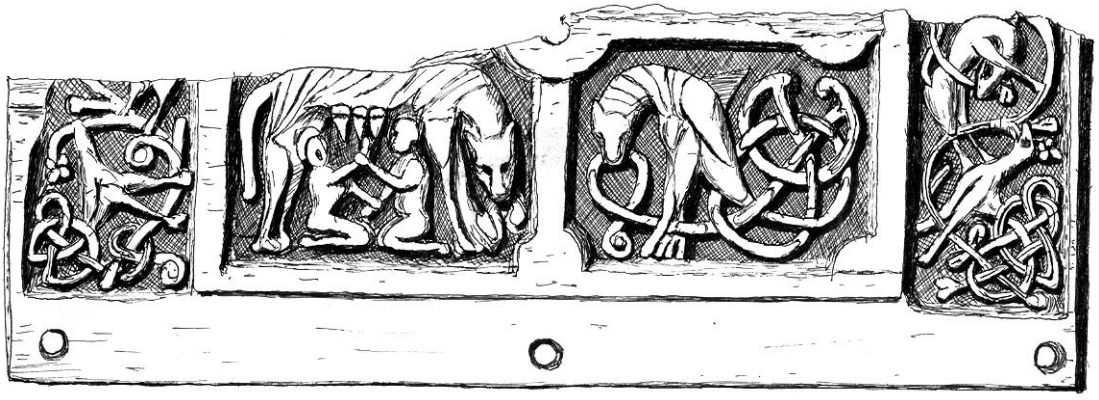

Fig. 4 Roudham, Larling: 'The Larling Plaque', a Middle Saxon bone/ivory bookplate.
NHER

likely to be a ploughed-out round barrow (NHER 49757, TG 2884 0902). Two ditches revealed by the magnetometer survey can be linked to a large cropmark enclosure, recently identified from satellite images of the site; no dating evidence was recovered when one of these ditches was evaluated (NHER 49758, TG 2943 0865).

Norwich, Tombland, Samson and Hercules (NHER 704; TG 2329 0886)

by Gary Trimble, NAU Archaeology.

An archaeological evaluation was carried out for City Living Developments. The evaluation identified the presence of surviving archaeological features and deposits despite heavy truncation of the site in recent years. A medieval burial, almost certainly associated with the church of St George to the south, was revealed. More burials are likely to survive in this area, although they are heavily truncated by later sand and/or chalk quarrying. Other smaller pits were recorded, probably medieval and early post-medieval rubbish pits. NAU Archaeology Report 1317.

Riddlesworth, Devil's Ditch (NHER 6115; TL 9897 8273)

by Sarah Bates, NAU Archaeology.

An archaeological watching brief and excavation were carried out for Anglian Water. During the work a section was dug across the Devil's Ditch showing evidence for a recut or cleaning out of the bottom of the ditch. No significant datable finds were recovered, but Optically Stimulated Luminescence (OSL) dating of samples from the ditch fills provided dates of 590±30 BC, AD 820±160 and AD 790±140. These suggest that the ditch might have been originally dug during the Iron Age, but continued in use – or was reused – during the Anglo-Saxon period. NAU Archaeology Report 1307 (Assessment), full report to follow in 2009.

Riddlesworth, Riddlesworth Hall School (NHER 50434; TL 9650 8143)

by Richard Mortimer, CAM ARC.

Evaluation for Kilngrove and Riddleworth Hall School recorded surface scatters of prehistoric worked flint and pottery, some of which were retained within sub-surface and broadly contemporary tree throws. A significant assemblage of worked flint was recovered, suggesting low-level flintworking on the site from the Mesolithic to the Early Bronze Age, with the bulk of the assemblage dating from the Middle Bronze Age or later. Late Bronze Age pottery was also recovered from evaluation trenches. CAM ARC Report 963.

Roudham, St Ethelbert's Church, Larling (NHER 50404; TL 9819 8971)

by Chris Birks, Chris Birks Archaeological Services.

An archaeological evaluation by trial trenching was carried out for Carl Foster on behalf of the Parochial Church Council prior to an extension of the graveyard. The plot of land included the findspot of one the most important finds in Britain of its type and period (NHER 6000), the elaborately decorated Middle Saxon bone/ivory bookplate known as The Larling Plaque (Fig. 4). The field in which this was found also produced great quantities of Roman, Middle Saxon (otherwise rare in this area) and medieval pottery fragments, as well as a Middle Saxon pin and medieval harness. The results of the evaluation were surprisingly negative. Chris Birks Archaeological Services CB085R.

Southery, Westgate Street (NHER 49133; TL 6209 9456)

by Vicky Mellor, Archaeological Project Services.

Land in the historic core of Southery and near to previous discoveries of Roman and Saxon remains was the subject of an evaluation for D. Aguila-Agon and Nicholson Machinery Ltd. A pit of probable Late Saxon date containing evidence for occupation and industrial activity was revealed, together with several other pits that, although undated, were similar to the

Late Saxon example and are perhaps contemporary. These remains were sealed by a buried medieval soil. Late post-medieval structural remains were extensive and a collection of horseshoes indicated a farrier at the site at this time. APS Report 6/07.

Thetford, Abbey Barns (NHER 5748; TL 8646 8348)

by Chris Birks, Chris Birks Archaeological Services.

An archaeological evaluation by trial trenching for Purcell Miller Tritton recorded the remains of a 19th/20th-century brick floor, possibly for a stable. Despite considerable interventions on this site in the past, very few below-ground archaeological remains have been revealed.

A series of test pits were excavated to examine structural elements of the standing buildings, specifically the depths of foundations for the southern range. The levels of undisturbed 'natural' chalk-sand deposits showed a reduction in height from north to south in line with the natural topography. It is known that the land had been levelled and concreted in the 1940s when the site was used as a depot, and any *in-situ* archaeological remains that may have remained would probably have been truncated or destroyed at that time. Chris Birks Archaeological Services CB080R.

Thetford, Jubilee Close (NHER 5756; TL 8630 8268)

by Michael Boyle, NAU Archaeology

An archaeological evaluation was carried out for Rees Pryor Architects LLP. Thetford's Anglo-Saxon defensive ditch was located and found to be 8.0m wide and 3.0m deep. A trench spanning the full width of the ditch was excavated to reveal the full sequence of deposits in the ditch. Artefactual dating from the ditch was scant, but a single sherd of Thetford-type ware was retrieved from the basal fill. In addition, two of the lower fills were selected for OSL dating and returned dates of 918 AD ±110 years for the secondary fill of the ditch and 1208 AD ±50 years for the sixth fill of the ditch.

Immediately north-east of the ditch was the base of a bank, which survived to a maximum height of 1.30m. Four well stratified sherds of Thetford-type ware indicated that the bank was contemporary with the ditch.

A NW–SE linear feature truncated the post-medieval soils adjacent and parallel to the Anglo-Saxon bank. A single sherd of Thetford-type ware collected from the feature was undoubtedly redeposited and the ditch was interpreted as a late post-medieval boundary following the line of the defences. NAU Archaeology Report 1672a (Assessment), full report to follow in 2009.

Thetford, Old Gasworks, Bury Road (NHER 5868; TL 8695 8250)

by John Ames and Rebecca Crawford, NAU Archaeology.

An archaeological evaluation was carried out for Atkins Heritage. Evidence for Late Saxon occupation was recovered in the form of pits, post-holes and ditches. Additional evidence for timber structures was demonstrated by the presence of fragments of burnt daub across the site. Intensive Late Saxon industrial activity was attested by the recovery of 55kg of ironworking debris, including both smelting and smithing slag.

The evaluation also revealed evidence for a large, chalk-walled structure with associated burials. This building is believed to be the remains of the church dedicated to St Edmund, first revealed on the site during excavations by Group Captain Knocker in 1957. The foundations consisted of chalk and flint bonded with a fine chalk/lime flecked mortar. Two of the walls were approximately 1.5m wide and could represent tower walls. Within the right angle of the tower walls a probable floor surface was located *in situ*, this floor had been truncated by later pitting and burials. Grave cuts

Plate 6 Witton to North Walsham: an 18th-century brick kiln to the east of North Walsham. NAUA

were also seen to truncate the chalk walls, suggesting that burial continued after the church was demolished.

The overall impression is of one phase of Late Saxon occupation, located in the vicinity of the church. The evidence collected suggests that. From the evidence uncovered it is concluded that this Late Saxon settlement was abandoned during the 11th century and that there was then little or no occupation until the site became a gasworks in the 19th century. NAU Archaeology Report 1331.

West Dereham, Crimplesham Quarry (NHER 50596; TF 66491 03370)

by Rebecca Crawford, NAU Archaeology.

Archaeological fieldwalking and geophysical survey were undertaken for Frimestone Ltd across a proposed quarry extension. Although no significant concentrations of finds of any kind were located during the course of the fieldwalking, the geophysical results confirmed the presence of four ring-ditches (NHER 16162, 18825 and 18235). In addition to these known features, a further two sub-annular geophysical anomalies of similar dimensions to the ring-ditches and a significant number of linear features that probably correspond to later field boundaries were identified. There was also a large number of amorphous and circular anomalies. A linear anomaly aligned approximately NW–SE was tentatively interpreted as a trackway. NAU Archaeology Report 1697.

Witton to North Walsham, Anglian Water Pipeline (NHER 49123; TG 3188 3156 – TG 2959 2981)

by Peter Crawley, NAU Archaeology.

An archaeological watching brief and excavations were carried out for Anglian Water along the length of a new pipeline. Numerous post-medieval and modern pits were discovered along the pipeline, many of which contained traces of charcoal. One small cluster of pits containing Neolithic worked flint was noted. Several ditches were revealed, all of which appeared to be post-medieval field boundaries. The area of a known brick kiln was excavated, although no *in-situ* remains were found, but an 18th-century brick kiln was excavated on the high ground to the east of North Walsham (Plate 6). NAU Archaeology Report 1284a (Assessment), full report to follow in 2009.

Plate 7 Wiveton, St Mary's church: exposed recess in the northern wall of the chancel.
NAUA

Wiveton, St Mary's church (NHER 6169; TG 0435 4279)

by Bernie Bartrum, NAU Archaeology.

An historic building record was carried out for Marshall Sisson Architect of a recess in the northern wall of the chancel opened during recent building repairs (Plate 7). It is possible that the recess is a wall tomb, which could also have served as an Easter Sepulchre, but it is not possible to be certain without further investigation of the arched recess. NAU Archaeology Report 1272.