PRINCIPLES AND PRACTICE

The Application Of The Harris Matrix To Standing Building Recording

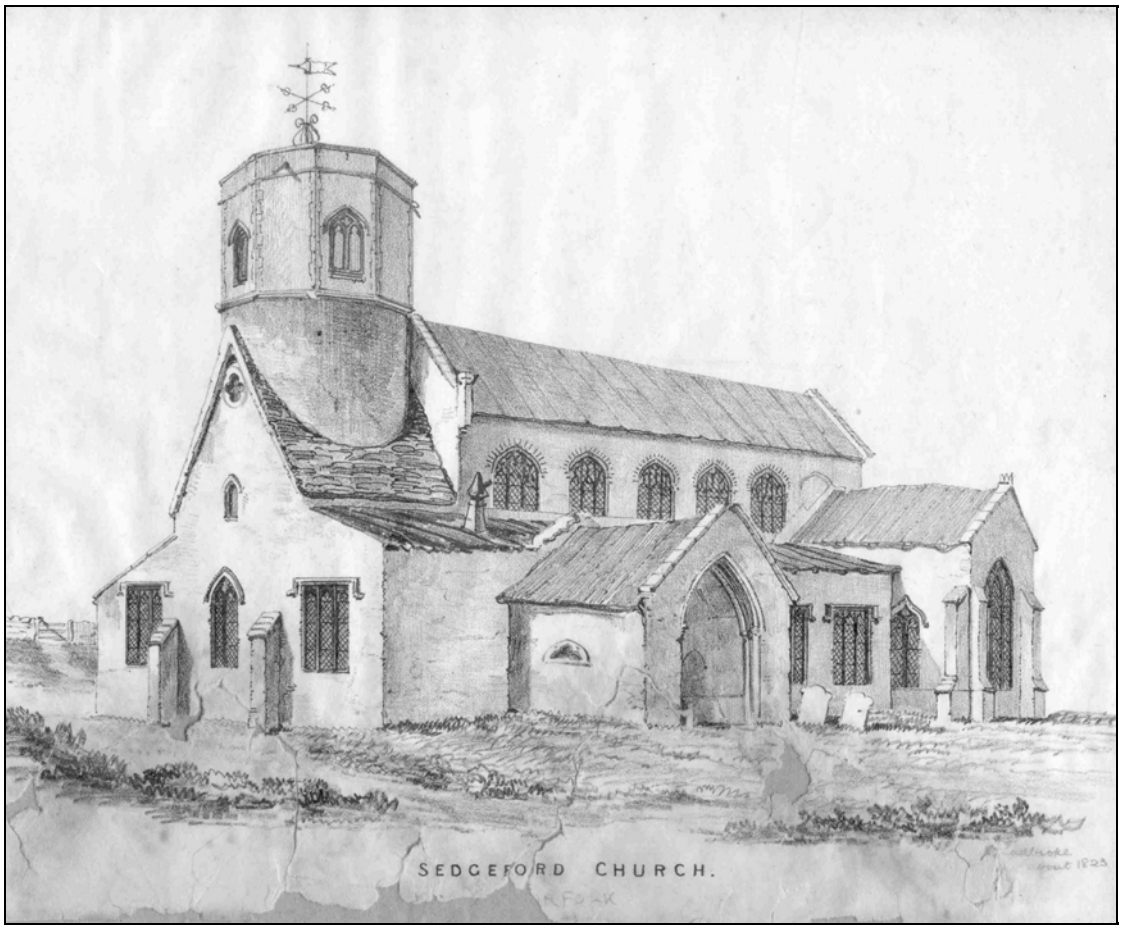

Richard Hoggett
University of Bristol

“We can look at an old wall just as if it was an archaeological section in the ground; we can see which was the earliest piece, what has been added on and what has been cut into it.”

Mick Aston (2000, p.89).

“In the present report one notes with some relief ... that the authors were forced to abandon their attempt to apply the Harris-style matrix to the analysis of the standing fabric.”

David Parsons discusses the work at Deerhurst in Cramp, *et al*. (1998).

“The first rule about stratification is that there is no invariable rule.”

Mortimer Wheeler (1954, p.45).

Contents

List of Illustrations

ABSTRACT

Through a detailed discussion of the *Laws of Stratigraphy* developed by Edward Harris and study of the few existing examples, the suitability and use of the Harris Matrix system for the analysis of standing buildings has been evaluated and found to be successful, albeit with modifications to compensate for the differences between archaeological and architectural stratigraphy. To illustrate the methodology, data produced by the detailed study and recording of the fabric of the church of St. Mary the Virgin in the Norfolk village of Sedgeford, has been used to create a Harris Matrix of the building's structural history. A relative stratigraphic sequence having been established, the next step in the ongoing work of the *Sedgeford Historical and Archaeological Research Project* will be to correlate the building's Harris Matrix with the existing historical documentation in order to produce a more detailed chronological history of the building.

ACKNOWLEDGEMENTS

This dissertation has grown out of fieldwork originally conducted during the summers of 1996-99 at the church of St. Mary the Virgin, Sedgeford, Norfolk, as a part of the ongoing work of the Sedgeford Historical and Archaeological Research Project (SHARP). Thanks must therefore go to SHARP's directors, Dr. Neil Faulkner and Dr. Keith Robinson, and to those members of the project team past and present to whom I am indebted, especially Janet Hammond, Anj Cox, Dr. Peter Carnell, Pippa Willcox, Jonathan Fox, Sophie Cabot and all of the SHARP volunteers who have helped in the recording over the years. I am grateful to you all.

A particularly significant debt of gratitude is owed to my friend and colleague Dom Andrews for his wonderful elevation drawings of the church (Figures 12-15), the subsequent work would have suffered greatly without him.

Due thanks must also go to the Reverend Andrew Butcher, the churchwardens, especially Dr. Hugh Ford, and to the parishioners of Sedgeford, for allowing us a free reign in the recording of their church.

I am grateful to Dr. Edward C. Harris, creator of the Harris Matrix, whose e-mail correspondence and provision of free journals have proved invaluable. I am also grateful to my dissertation supervisor Mr. Mark Corney at the Archaeology Department of the University of Bristol for his helpful and constructive advice.

Finally, I thank my friends and family, who have had the decency to at least pretend to be interested in the minutiae of archaeological stratigraphy and standing building recording.

I would like to dedicate this dissertation to Marion McCabe.

SOME NOTES ON TERMINOLOGY

In accordance with Harris' 1975 paper *The Stratigraphic Sequence: A Question of Time*[1] the following definitions will apply throughout this dissertation.

Stratigraphy The descriptive study of archaeological or geological strata, their occurrence, contents, succession and classification with a view to constructing a chronological sequence[2].

Stratification Any number of relatable deposits of strata, of an archaeological or geological nature[3].

Stratigraphic Sequence The relative chronology of a site as deduced from its stratification[4].

From the outset it must be stated that the term ***Harris Matrix*** actually refers to the grid of rectangular boxes used to interpret archaeological stratification, see Figure 1 below. It is merely a format for the presentation of the stratigraphic sequence of a site, and the resulting diagrams are often know as ***Harris Matrices***. The name has no other connotation, mathematical or otherwise[5].

---

1 *World Archaeology Volume* 7, 109-121.

2 Ibid. p.110.

3 Ibid.

4 Ibid.

5 Harris 1989, p.34.

INTRODUCTION

The Harris Matrix method of stratigraphic interpretation was invented by Edward Harris in 1973 during post-excavation work on the complex stratigraphic sequences experienced during the Winchester excavations of the 1960s[1]. Its invention revolutionised archaeological recording and analysis by providing a simple method by which archaeological contexts could be related to one another, according to their relative stratigraphic positions, and a graphical record of their sequence compiled[2].

Since the publication of the first paper on the Harris Matrix in 1975[3], and the publication of the seminal *Principles of Archaeological Stratigraphy* in 1979[4], the Harris Matrix method has become widely used in the recording and interpretation of archaeological stratification from excavations across the world. *Principles* has subsequently been translated into many languages[5], bringing the method to an even wider audience; many notable archaeologists have supported and taught its use[6] and several archaeological organisations have adopted the Harris Matrix as their standard interpretative method, gearing their recording systems towards its compilation[7].

The widespread application of the Harris Matrix method has led to the publication of much material that makes extensive use of it and also of that which adapts the Harris Matrix to different archaeological circumstances, e.g. Paice (1991)[8]. Seventeen such papers were brought together in the 1993 publication *Practices of Archaeological Stratigraphy*[9], a companion volume to *Principles*, which featured a wide intellectual and geographical diversity of subjects. Amongst them were two papers which applied the Harris Matrix, as developed for the analysis of subsurface stratification, to the analysis of standing buildings, a concept that forms the subject of this dissertation.

In the first paper Martin Davies[10] used two Australian colonial house sites of 'varying scale and complexity[11]' to demonstrate that 'the matrix provides a firm methodological footing for structural investigations[12]', whilst in the second David Simmons *et al*[13], integrated architectural and archaeological recording of a nineteenth century smithy and its lands in Massachusetts to create what they dubbed a 'Total Site Matrix'[14]. Whilst they served to

[1] Harris, Brown and Brown 1993, p.1.

[2] M.O.L.A.S. 1994, Section 1.2: Stratigraphy and the Single Context Planning System.

[3] Harris 1975.

[4] Harris 1979a.

[5] To date Italian, Slovene, Polish, Japanese and Spanish, with German and Chinese versions underway. From the Harris Matrix web site at <http://www.harrismatrix.com/about.htm> accessed on 29th August 1999.

[6] Especially Philip Barker, see Barker 1993, Chapter 10.

[7] Such as the Museum of London Archaeology Service, who were the first to use the Harris Matrix in its trial period.

[8] In analysing the Egyptian site of Tell el-Maskhuta, Patricia Paice employed additional symbols in the Matrix in order to increase the information it displayed regarding the stratigraphic units of the site.

[9] Harris, Brown and Brown 1993.

[10] 'The application of the Harris Matrix to the recording of standing structures'. In Harris, Brown and Brown 1993, pp.167-180.

[11] Ibid., p.179.

[12] Ibid.

[13] Simmons, Stachiw, & Worrell 1993, 'The Total Site Matrix'. In Harris, Brown and Brown 1993, pp.181-197.

[14] Ibid.

demonstrate that the Harris Matrix could be successfully applied to structural remains, these papers largely concentrated on the presentation of results rather than the processes involved in arriving at them. In addition, neither paper used examples dating from before 1800 and as such greatly benefited from the facts that the historical documentation was very detailed and that the periods of occupation were relatively short lived.

A further paper in which the Harris Matrix was applied to a standing building was published by Heather Harvey in 1997[1]. Harvey took the seventeenth century King's Castle on Castle Island, Bermuda as her case study, discussing her methodology at length, presenting large quantities of data and suggesting modifications that could be made to the Harris Matrix in order to make it more suitable for architectural analysis. Once again the site in question was well documented, but its development spanned a more lengthy three centuries and the paper 'is considered to be a significant step forward in the interpretation of above ground archaeological sites[2]'.

It is the aim of this dissertation to use the Harris Matrix to construct a stratigraphic sequence for the development of the church of St. Mary the Virgin in the north west Norfolk parish of Sedgeford, using data produced by the detailed study of the fabric and history of the building conducted between 1996-1999 as a part of the Sedgeford Historical and Archaeological Research Project (hereafter SHARP). Unlike the case studies cited above, the development of the church at Sedgeford spans nearly a millennium and, also unlike the case studies above, Sedgeford church has a poor documentary history. Ultimately archaeological and architectural methods will have to be used to phase and date the fabric, although as will be seen this falls outside the limits of this dissertation. As a parish church St. Mary's represents a monument type that has 'long dominated the English landscape ... [and is] the best-preserved medieval monument [type] in the country[3]' and as such there is sufficient scope for a successfully demonstrated methodology to have a wider application both within church archaeology and the archaeology of buildings in general.

In order that the methodology be properly understood, it will first be necessary to examine the development of the fundamental principles of stratigraphy that underpin the Harris Matrix method, before examining how these can be equated with and applied to architectural remains. Incorporating the papers discussed above, the recording and analysis of standing buildings will be discussed with a view to creating Harris Matrices from the data collected. In order to illustrate the methodology, the case study of the church of St. Mary the Virgin, Sedgeford, will be presented and a Harris Matrix diagram of the building's stratigraphic sequence compiled.

---

[1] Harvey 1997.

[2] Arnell 1997.

[3] Clarke 1984, p. 63.

GEOLOGICAL AND ARCHAEOLOGICAL STRATIGRAPHY

The Harris Matrix 'provides a simple method of relating one context to another according to their relative stratigraphic positions'[1] through the application of several laws that govern the nature of stratification. Ultimately derived from the principles of geological stratigraphy, these laws have been adapted for application to archaeological deposits and, in combination with appropriate recording methods, allow such stratigraphic sequences to be constructed quickly and easily. This section will examine the development of these fundamental laws of stratigraphy, in order that the Harris Matrix method may be thoroughly understood.

THE LAWS OF GEOLOGICAL STRATIGRAPHY

The principles behind the interpretation of geological stratification have been well understood since the late seventeenth century and their development was largely a result of work by the Dane, Nils Stensen, also know as Nicolaus Steno, who lived and worked in Italy. In 1669 he published a geological treatise in which he outlined three laws he had identified pertaining to the formation of geological strata[2], these laws are reproduced in the box below. To elucidate his reasoning, Steno's publication also contained an idealised geological section drawing, the first of its kind, based upon geology that he had encountered in Italy. Significantly, this illustration served to demonstrate how such drawings could be used both for the recording of stratigraphic sequences and for interpreting and understanding their development[3], important recurring themes, as will become apparent.

STENO'S THREE LAWS FOR THE INTERPRETATION OF STRATA

THE LAW OF SUPERPOSITION
In a series of beds, as originally deposited, the upper are younger, for each must have been formed be deposition upon a relatively firm and solid substratum[4].

THE LAW OF ORIGINAL HORIZONTALITY
When strata are first formed their upper (and usually also their lower) surfaces are approximately horizontal. Strata that are now inclined to the horizon must therefore have been tilted after their formation[5].

THE LAW OF ORIGINAL CONTINUITY
A sedimentary bed, at the time of its formation, is a continuous sheet that either thins to a feather edge or extends to a barrier that forms a margin of the basin of deposition. Therefore there cannot have been, originally, an exposed edge of the entire bed from top to bottom. If the edges of strata are seen exposed, they must have been exposed by breakage and dislocation or by wear[6].

A further step in the understanding of geological stratification came with the work of Englishman William 'Strata' Smith in the early nineteenth century. Widely heralded as the 'Father of English Geology'[7], he recognised that individual geological strata contained differing assemblages of fossils and that the composition

[1] M.O.L.A.S. 1994, Section 1.2: Stratigraphy and the Single Context Planning System.
[2] Woodford 1965, p. 4.
[3] Bahn 1996, p. 64.
[4] Woodford 1965, p. 4.
[5] Ibid., p. 4.
[6] Ibid., pp. 4-5.
[7] Bahn 1996, p.66.

of such assemblages could be used to correlate strata of the same geological age in different localities[1]. This comparative method was subsequently given a chronological significance by Sir Charles Lyell who devised a method by which the relative sequence of geological strata could be determined from these fossil assemblages. He wrote that older strata would contain 'an extremely small number of fossils identifiable with species now living[2]' and conversely that more recent strata would contain a greater number of fossils identifiable with living species. By allowing a chronological direction of a relative sequence of deposition to be established, even in strata that have subsequently been displaced, this *Law of Faunal Succession* enables the stratigraphic sequence to be interpreted. Indeed, in the case of displaced strata, the *Law of Superposition* cannot be applied until the sequence of deposition is known[3].

Whilst the work of Steno, Smith and Lyell produced the laws of stratigraphy that related to the *formation* of stratification, the work of Scotsman James Hutton concentrated on the *geological processes* that caused strata to be formed and the processes that affected and shaped them after deposition. In his 1795 publication *Theory of the Earth* he identified the cyclical process in which the erosion of rocks and soil is balanced by the elevation of land, and described how deposited strata may be subjected to great changes, be broken, folded or even destroyed, creating the stratigraphic sequences we see today[4]. As both depositional and post-depositional processes are responsible for the modern appearance of stratification, an understanding of both is vital for the stratigraphic sequence to be interpreted accurately.

By the time of the publication of Lyell's *Principles of Geology* (1830-1833) the laws of geological stratigraphy, which underpin so much of geology, were firmly established. However, these laws were primarily devised through the study of, and for application to, the strata of sedimentary rock and not archaeological deposits. If, as Pyddoke states, "archaeological strata are nothing more than comparatively recent examples of the effects of geological processes[5]" then this is not a problem and laws of stratigraphy outlined above are equally applicable to archaeological and geological stratification. However, if, as Harris states, it is "unlikely these geological principles of stratigraphy could be of archaeological use without considerable revision[6]" then one must examine the necessity and nature of such revisions.

The Laws of Archaeological Stratigraphy

The development of the laws of geological stratigraphy discussed above formed an intrinsic part of a revolution in scientific thinking that spanned the seventeenth to nineteenth centuries. The culmination of this revolution was that the prevalent belief in a biblical creation was gradually overturned, and a lengthier evolutionary explanation of human antiquity established (detailed discussions of this period can be found in both Trigger[7]

---

1 Trigger 1989, p.92.

2 'Subdivisions of the tertiary epoch'. In Mather and Mason (Eds.) 1964. *A Source Book in Geology*. Quoted in Harris 1989, p.3.

3 Harris 1989, p.5.

4 Trigger 1989, p.92. Harris 1989, p.4.

5 Pyddoke 1961, p.16.

6 Harris 1989, p.6.

7 Trigger 1989, Chapters 2, 3 and 4.

and Bahn[1]). Out of this paradigm shift archaeology emerged as an independent discipline, although the principles of geological stratigraphy continued to be applied to archaeological deposits until well into the twentieth century.

The first recorded instance of an archaeological artefact being given a stratigraphic context came in 1797, when John Frere found a group of flint axes at Hoxne in Suffolk. He observed that they lay in a stratum with the bones of extinct animals and directly beneath one containing sand and shells, which he conjectured 'to have been once the bottom, or at least the shore, of the sea[2]'. His application of geological principles to archaeological stratification led him to conclude that 'the situation in which these weapons were found may tempt us to refer them to a very remote period indeed[3]'. Frere's work went largely unnoticed at the time, but his observations served to demonstrate that the laws of geological stratigraphy *could* be applied to archaeological deposits. However, it must be remembered that the deposits in question were of such antiquity as to be geological in nature despite containing archaeological artefacts.

In 1817, whilst working on the fossil assemblages mentioneded above, William Smith wrote that 'organised fossils are to the naturalist as coins to the antiquary[4]', meaning that their presence allowed strata to be correlated and dated, albeit only relatively in the case of fossils. Whilst his analogy provides a clear indication that intellectual parallels were being drawn between the geological *Law of Faunal Succession* and archaeological artefacts, it also serves to demonstrate that they are not directly analogous. The theme was further developed in 1836 by the curator of the National Museum in Copenhagen, Christian Thomsen, whose development of the Three Age System in 1836 relied heavily upon the 'succession' of artefacts from the Stone to Bronze and then the Iron Age. In 1861 his successor Jens Worsaae used the same principles to subdivide the Stone Age into three phases, subsequently named the Palaeolithic, Mesolithic and Neolithic by Lubbock in his book *Prehistoric Times* (1865)[5].

Whilst it is true that artefact assemblages unique to each stratum allow some strata from different localities to be correlated, and less so, that the degree of similarity between modern and archaeological artefacts can be used to date them, it cannot be said that the *Law of Faunal Succession* has a direct archaeological counterpart. Both typology and seriation rely upon similar principles to construct chronologies, however archaeological artefacts are created by humans and as such are not subjected to evolutionary development, as the fossils studied by Smith and Lyell were. In addition, the diversity between regions means that a correlation of artefacts will not necessarily result in strata that are contemporary[6]. Ultimately though, whether it is considered applicable or not, this law is concerned with the contents of a stratum rather than the stratum itself and therefore has to be considered of secondary importance in the study of archaeological stratigraphy[7].

---

1 Bahn 1996, Chapters 2, 3, 4 and 5.

2 Frere 1800, p.205.

3 Ibid.

4 Smith, W. 1817. *Stratigraphical System of Organised Fossils.* Quoted in Pyddoke 1961, p.14.

5 Greene 1995, p.27.

6 Harris 1989, p.8.

7 Harris 1979b, p.112.

The only primary law of geological stratigraphy that was applied to archaeological stratigraphy throughout the nineteenth and most of the twentieth centuries was the *Law of Superposition*, although, even when recognised, it was often wrongly defined[1]. For instance, in Browne (1975) the law is explained, fairly typically, as being that 'the stratum at the bottom of a series will have been laid down earliest and those above it successively through time from bottom to top[2]'. No mention is made of the crucial clause that strata must be found as *originally deposited*[3] and no other laws are mentioned in relation to the 'concept of stratification'[4].

Incredibly, despite the clear differences in the nature and formation of geological and archaeological stratification, it was not until the late 1970s and the work of Edward Harris that *any* academic examination of the application of the laws of geological stratigraphy to archaeological deposits or of the nature of the laws governing archaeological stratigraphy was made. As a result of his work, in 1979 Harris published his four laws of archaeological stratigraphy, the first three being adaptations from Steno's geological laws and the fourth being an archaeological invention, along with a discussion of archaeological stratigraphy[5].

HARRIS' FOUR LAWS OF ARCHAEOLOGICAL STRATIGRAPHY[6]

The Law of Superposition
In a series of layers and interfacial features, as originally created, the upper limits of stratification are younger and lower are older, for each must have been deposited on, or created by the removal of, a pre-existing mass of archaeological stratification.

The Law of Original Horizontality
Any archaeological layer deposited in an unconsolidated form will tend towards a horizontal position. Strata which are found with tilted surfaces were originally deposited that way, or lie in conformity with the contours of a pre-existing basin of deposition.

The Law of Original Continuity
Any archaeological deposit, as originally laid down, or any interfacial feature, as originally created, will be bounded by a basin of deposition, or may thin down to a feather-edge. Therefore, if any edge of a deposit or interfacial feature is exposed in a vertical view, a part of its original extent must have been removed by excavation or erosion, and its continuity must be sought, or its absence explained.

The Law of Stratigraphical Succession
A unit of archaeological stratification takes its place in the stratigraphic sequence of a site from its position between the undermost (or earliest) of the units which lie above it and the uppermost (or latest) of all the units which lie below it and with which the unit has a physical contact, all other superpositional relationships being redundant.

The first of these four laws, the *Law of Superposition*, is of paramount importance in the analysis of archaeological stratification, because it allows the relative order in which any two stratigraphic units were created to be identified. However, because it only relates to any two units, nothing can be determined about the overall stratigraphic sequence of a site as a whole from these relationships alone[7].

---

1 Harris 1989, pp. 11-13.

2 Browne 1975, p.21.

3 Harris 1989, p.13. See the box on Page 7 above.

4 Brown 1975, pp.21-22.

5 Harris 1989 , pp.29-34. Harris 1979b, pp.112-113.

6 Harris 1979b, p. 112.

7 Harris 1989, pp.30-31. Harris 1979b, p.113.

The *Law of Original Horizontality* is largely similar to its geological counterpart, but applied on a much smaller scale and, whereas it was previously applied to underwater sedimentary formations, the archaeological equivalent can also be applied to dry land. Particular archaeological significance is given to the shape of the basin of deposition, which will influence the contours of subsequent depositions to a degree, although ultimately natural forces will cause a tendency towards horizontality[1].

The *Law of Original Continuity* is also a miniaturised version of its geological counterpart, allowing later intrusions into pre-existing deposits to be easily recognised by their occurrence in sections and stratigraphic correlations between separated parts of the same deposit to be identified[2].

Although these three laws allow the determination of *stratigraphic relationships* and *correlations*, they alone are limited in their ability to determine the *stratigraphic sequence* of an archaeological site, due to the fact that they are adapted from laws applied to geological stratification. Whereas as Harris states, 'in geological circumstances, the accumulated order of the stratification may be equated to the deposition of the strata through time[3]', the smaller scale of stratigraphic units experienced on archaeological sites means that multilinear stratigraphic sequences are regularly encountered which cannot be directly equated to the stratigraphic sequence of the site. The application of the *Law of Stratigraphical Succession* ensures that, whereas one stratigraphic unit may have a physical relationship with several below it and several above it, it can only occupy one position in the stratigraphic sequence of the site, as this sequence represents the site throughout *time* and the stratigraphic unit represents one 'event' in time[4].

In addition to the rationalisation of the laws and nature of archaeological stratigraphy, Harris' work[5] also introduced the *Harris Matrix*, a method by which the often very complex stratigraphic sequences encountered on archaeological sites were able to be demonstrated symbolically in a simplistic and unprecedented manner[6].

---

[1] Harris 1989, pp.31-33.

[2] Harris 1979b, p.114.

[3] Harris 1989, p33.

[4] Ibid., pp.34-36.

[5] Harris 1979a.

[6] Harris 1989, pp.33-34.

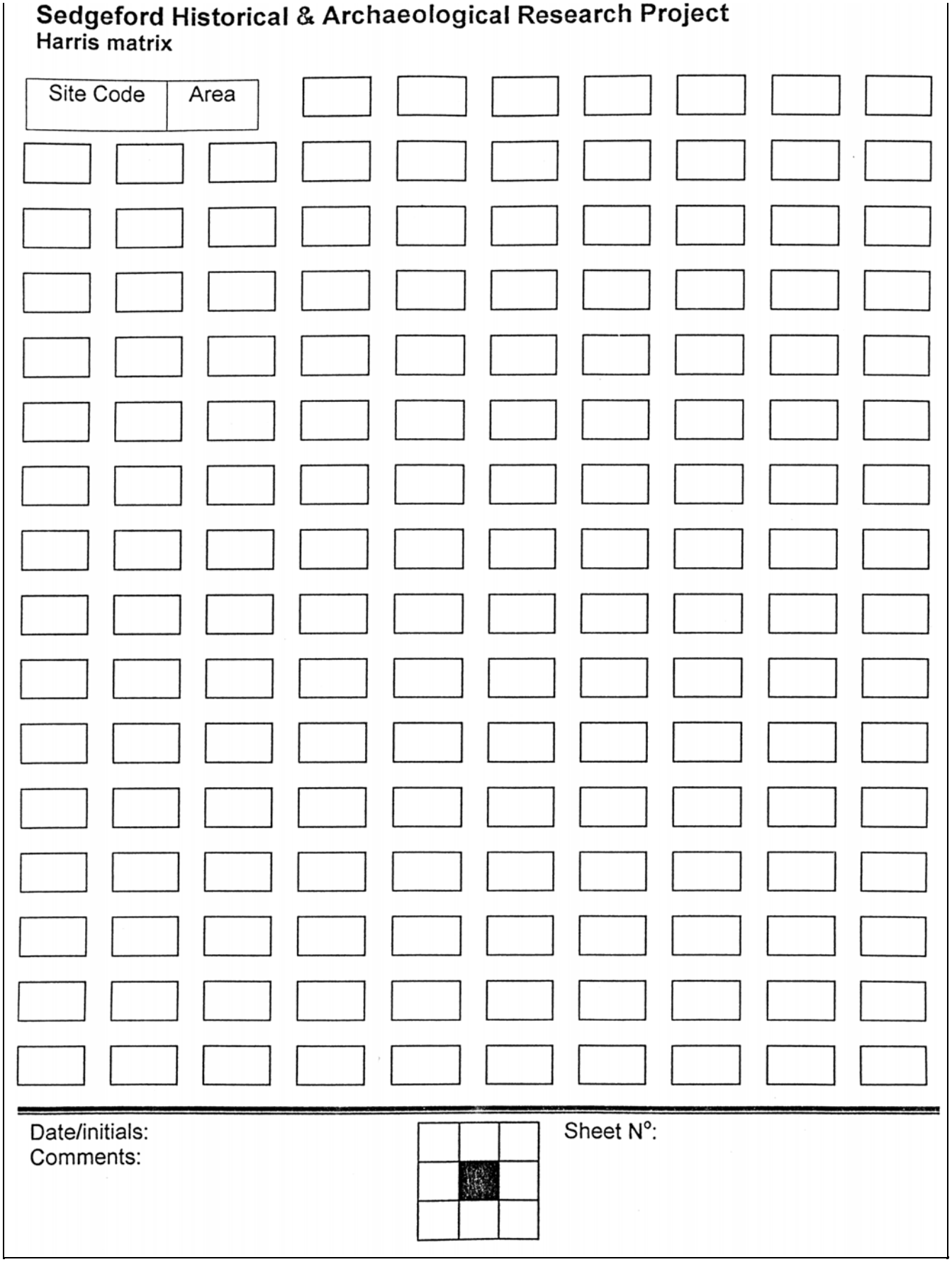

Sedgeford Historical & Archaeological Research Project
Harris matrix

Site Code	Area

Date/initials:
Comments:

Sheet N°:

FIGURE 1. THE HARRIS MATRIX PRO FORMA USED BY SHARP.

STRATIGRAPHIC SEQUENCES AND THE HARRIS MATRIX

The background to the development of the Harris Matrix was discussed above (p.5) and, as already stated (p.4), the name simply refers to the grid of rectangular boxes upon which the stratigraphic sequence diagram for an archaeological site can be constructed and presented. An example of such a pro forma can be seen in Figure 1 on the previous page.

One of the largest misconceptions about the Harris Matrix is the belief that it shows *all* of the stratigraphic relationships of an archaeological site. As will become clear, this is not true. The Harris Matrix represents the stratigraphic sequence of the site, defined by Harris as 'the order of the deposition of layers and the creation of feature interfaces through the course of time'[1].

In order for a stratigraphic sequence to be created the stratification must first be interpreted according to the *Laws of Superposition, Original Horizontality* and *Original Continuity* and all of the immediate superpositional relationships identified[2]. The nature of these three laws are such that there are only four possible relationships between any two stratigraphic units. These relationships are listed below and symbolically represented in Figure 2 in accordance with the conventions of the Harris Matrix[3].

a. Superpositional Relationship: Unit 1 is later than Unit 2.

b. Superpositional Relationship: Unit 2 is later than Unit 1.

c. Units 1 and 2 are separated parts of the same context.

d. Units 1 and 2 have no direct relationship.

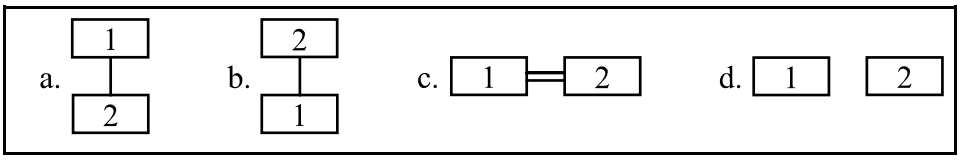

FIGURE 2. THE FOUR POSSIBLE RELATIONSHIPS BETWEEN TWO STRATIGRAPHIC UNITS[4].

In order to provide a worked example of the creation of a stratigraphic sequence, Figure 3 (right) shows a typical archaeological section, with each stratigraphic unit numbered separately[5]. It shows a foundation trench (6) that has been cut into pre-existing strata (7, 8 and 9). A wall has then been built in the trench (5) and its base then back-filled (3 and 4). The wall has later collapsed (2) and topsoil built up over it (1).

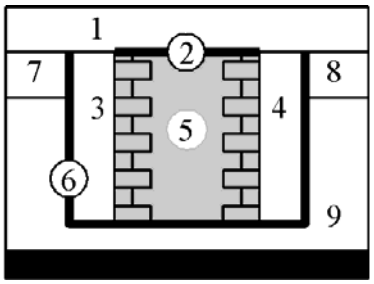

FIGURE 3. A HYPOTHETICAL SECTION.

[1] Harris 1989, p.36.

[2] Ibid.

[3] Harris 1989, pp. 34-36. Orton 1980, pp. 66-67.

[4] After Orton 1980, p. 67, Figure 3.1.

[5] After Harris 1989, p.39, Figure 12a.

Applying the three laws discussed above to the archaeological section shown in Figure 3, all of the direct stratigraphic relationships between the numbered stratigraphic units can be identified. These relationships are all symbolically represented in Figure 4.

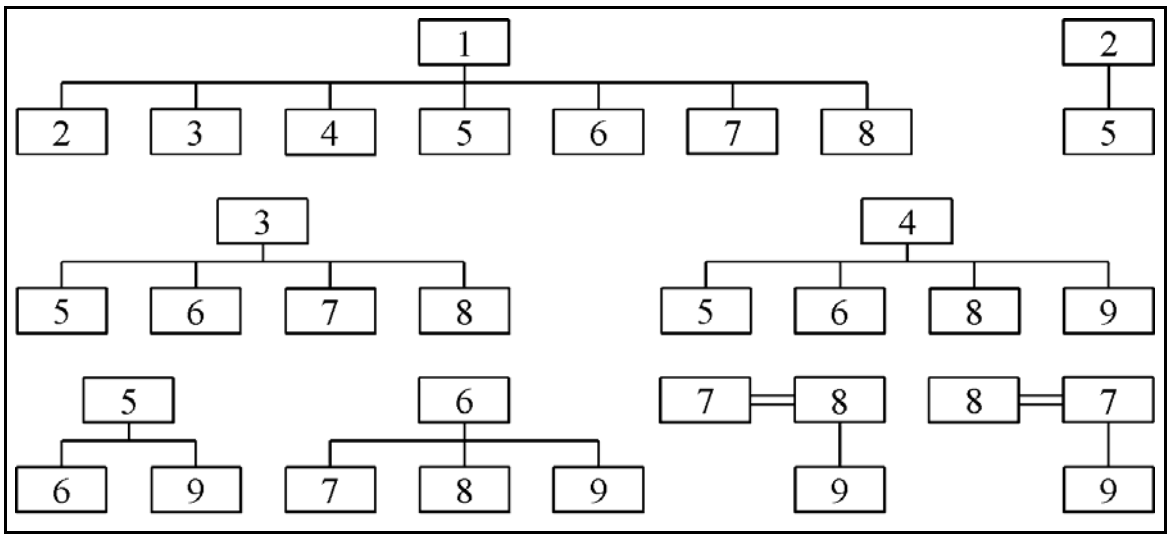

FIGURE 4. A BREAKDOWN OF THE STRATIGRAPHIC RELATIONSHIPS SHOWN IN FIGURE 3[1].

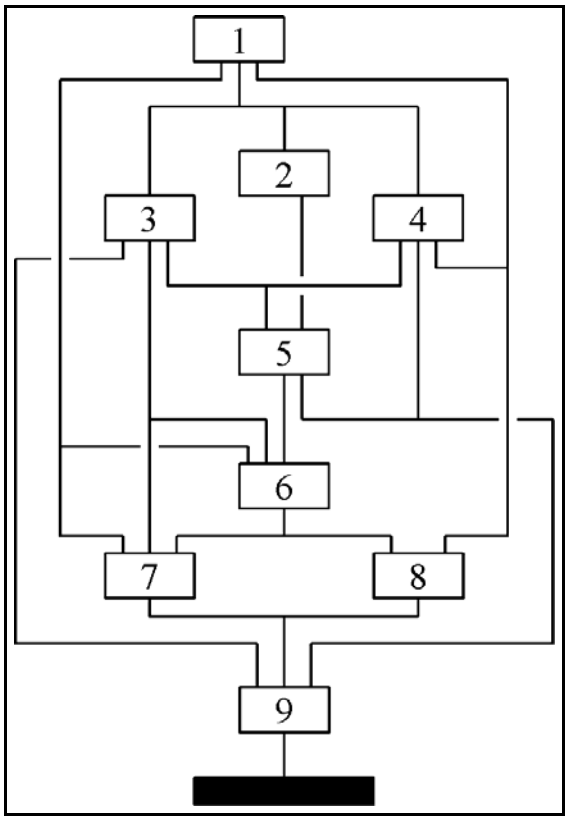

FIGURE 5. A HARRIS MATRIX WITHOUT THE APPLICATION OF THE *LAW OF STRATIGRAPHICAL SUCCESSION*[3].

Once the individual relationships within the stratification have been identified, they can then be combined to create a single Harris Matrix diagram. However, as Figure 5 demonstrates, if these relationships are merged without first applying the *Law of Stratigraphical Succession*, discussed above, the result is unnecessarily confusing and represents the original section drawing rather than the stratigraphic sequence of a site.

Through the application of the *Law of Stratigraphical Succession* the numerous stratigraphic relationships shown for each unit in Figure 4 can be reduced to simply 'the undermost of the units which lie above it and the uppermost of all the units which lie below it'[2]. When these immediate stratigraphic relationships are plotted onto a Harris Matrix sheet the resulting diagram represents the stratigraphic sequence of the site. Figure 6 shows the stratigraphic sequence of the worked example.

[1] After Harris 1989, p.39, Figure 12a.

[2] See page 10 above.

[3] After Harris 1989, p.39, Figure 12b.

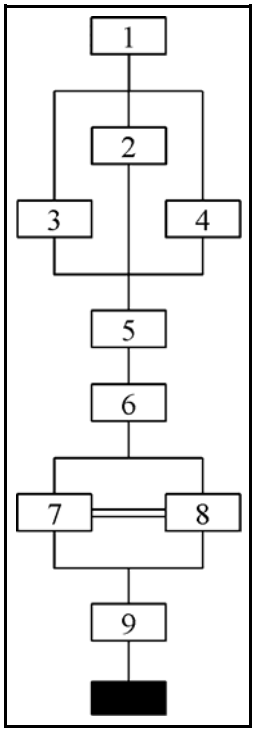

FIGURE 6. THE STRATIGRAPHIC SEQUENCE OF THE SECTION SHOWN IN FIGURE 3[1].

As can be seen, whilst the stratigraphic sequence shown in Figure 6 represents the order of deposition through time, it only represents the *relative* chronology between the stratigraphic units. As was discussed in relation to the *Law of Faunal Succession*[2], in order to ascribe dates to the stratigraphic sequence, reference must be made to the artefactual contents of the strata in question and the rules of *terminus post quem* and *terminus ante quem* applied. In more recent situations, existing documentary sources may allow precise dates to be ascribed[3].

Having established dates for the stratigraphic units, the layout of the Harris Matrix diagram can be adapted to show the resulting chronological relationships in addition to the relative sequence. For ease of presentation, stratigraphic units can be grouped into *phases* and phases grouped into *periods*. These resulting divisions can be demonstrated in a number of ways, although usually contemporary units are placed on the same horizontal row and phases and periods contained within dotted lines[4].

When constructing the chronological sequence it must be remembered that the order of the stratigraphic sequence cannot be changed, it is therefore of paramount importance that the stratification is accurately recorded. Secondly, it must also be remembered that in addition to the depositional phases represented by the stratification, there are also many non-depositional phases when deposits are eroded or destroyed, which must also be considered when analysing stratification. Both of these factors must briefly be discussed further, before the application of stratigraphic laws to architectural remains can be examined.

---

[1] After Harris 1989, p.39, Figure 12c.

[2] See page 9 above.

[3] Detailed discussions of the phasing of stratigraphic sequences can be found in Harris 1989, pp. 108-119; Orton 1980, pp. 74-80; and Brown and Muraca 1993.

[4] Harris 1989, p115.

Identifying Stratigraphic Units

As was discussed above[1], the differing natures of archaeological and geological stratification was not considered an important interpretative issue until the twentieth century[2]. Whilst it is understandable that this should not be an issue on Stone Age sites such as those encountered by Boucher de Perthes in northern France, where archaeological artefacts were contained within geological stratification, from 1840 onwards excavations were being conducted on sites where the vast majority of the stratification was archaeological and, compared to geological stratification, comparatively recent[3].

Among the first archaeologists to address this issue was J.P.Droop whose *Archaeological Excavation* (1915) contained both a discussion of the nature of archaeological stratification and several hypothetical examples of commonly encountered situations[4]. Significantly he stated 'one point that should never be forgotten is the usefulness of making diagrams of the stratification and changes in the earth when such are visible'[5] and his diagrams serve to demonstrate that he understood the importance of recording the interfaces between stratigraphic units, a theme which was later built upon by Mortimer Wheeler.

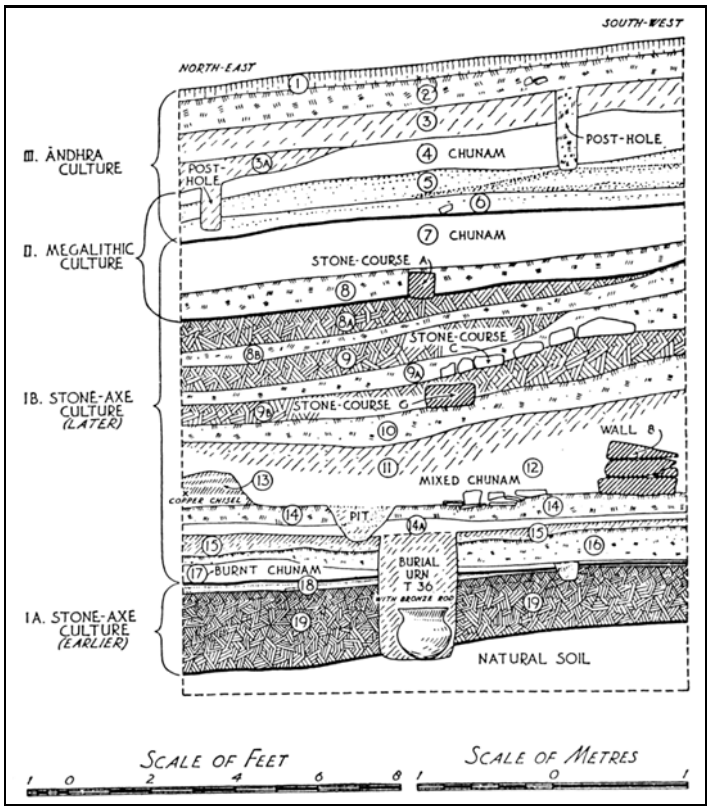

During his excavations of the 1920s Wheeler developed his distinctive methods of identifying and recording stratification, so that by the time his work at Maiden Castle began in 1934 he had established a very efficient recording system that produced results of the type seen in Figure 7. Writing of his methodology in 1954 he stated that 'from the outset, the strata are carefully observed, distinguished, and *labelled*'[6], and went on to stress the importance of having clearly delineated stratigraphic units in section drawings, which he treated as diagrammatic representations rather than illustrations[7].

Figure 7. Wheeler's section drawing from Brahmagiri, India[8].

---

1 Page 9 above.

2 Harris 1989, p.9.

3 Ibid.

4 Droop 1915, pp. 17-19, Figures 1 and 8 and Appendix E.

5 Ibid. p.17.

6 Wheeler 1954, p.54.

7 Ibid. pp. 54-61.

8 Ibid. p.50. Figure 9.

One of Wheeler's students, Kathleen Kenyon, went on to write that, in addition to the recording methods that he had developed for deposited layers, 'the term stratification may also be applied in the archaeological sense to things which are not strictly layers at all, but pits, banks, trenches, in fact any disturbance in the soil'[1]. This combined *Wheeler-Kenyon School* of archaeological stratigraphy revolutionised approaches to the recording and analysis of stratification by introducing the concepts of numbered and clearly delineated stratigraphic units, both of which continue to be relevant today albeit in a slightly altered state. However, although they recognised the importance of individual strata and the interfaces between them, what Harris calls the *layer interfaces*, Wheeler and Kenyon overlooked an element crucial to the understanding of archaeological stratification - that of the *feature interface*[2].

Feature interfaces are created by the removal of existing stratification and represent stratigraphic units in their own right. Harris identifies two different types of feature interface - *vertical* and *horizontal*[3], examples of which can be seen in the hypothetical section drawing in Figure 3 above. Horizontal feature interfaces represent the level to which an upstanding stratum has been destroyed (Number 2 in Figure 3) and only occur on sites where 'remains of buildings survive'[4]. Vertical feature interfaces occur on most sites and result from the digging of holes into pre-existing stratification (Number 6 in Figure 3)[5]. Although Kenyon had clearly considered pits and trenches as stratigraphic elements, they are conspicuously absent from the text and diagrams of her chapter on *Recording an Excavation*[6], and an examination of Wheeler's section in Figure 7 reveals four instances of unrecognised vertical feature interfaces and potentially three unrecognised horizontal feature interfaces, the inclusion of which would greatly alter the stratigraphic sequence of the site.

These problems of incomplete recording were largely resolved by the introduction of *single context recording* method in the 1970s, now widely used in archaeology. With a *context* being identified as 'any single action, whether it leaves a positive or negative record within the sequence'[7] the stratigraphic significance of both deposits and cuts is inherent in the system. Each context is recorded in detail on a *pro forma* and drawings made of individual contexts, resulting in a logical and objective recording system which 'does not confuse the evidence with its interpretation'[8] and allows for the delegation of context recording to comparatively inexperienced excavators. Ultimately, by forcing excavators to identify and record the stratigraphic relationships between contexts, it also allows for the site's Harris Matrix to be continually constructed throughout the excavation[9].

All of the Laws and methods discussed above were originally developed for application to subsurface archaeological stratification, but, it is possible to apply them to the analysis of standing buildings.

---

[1] Kenyon 1961, p.69.
[2] Ibid.
[3] Ibid, p.59.
[4] Ibid.
[5] Ibid. pp. 59-60
[6] Kenyon 1961, Chapter VI, pp. 115-144.
[7] MOLAS 1994, Section 1.2.
[8] Barker 1993, p.168.
[9] MOLAS 1994, Section 1.2.

THE STRATIGRAPHY OF STANDING BUILDINGS

In 1994 Richard Morris wrote that 'for the greater part of its usage the word 'archaeology' has embraced buildings'[1] and lamented that the term was 'unnaturally narrowed to mean 'digging''[2] during the latter half of the twentieth century, thus giving rise to the use of the tautological phrase *standing buildings* to describe above ground archaeology[3]. Although today archaeology has largely returned to its original holistic approach, the facts that the *Laws of Archaeological Stratigraphy* were developed during this period of divergence, and that they are ultimately derived from geological laws, have meant that they are very strongly associated with subsurface archaeological stratification and little else. Despite general assertions to the effect that 'we can look at an old wall just as if it was an archaeological section in the ground'[4], there have been very few attempts to examine the validity and ease of applying these laws of archaeological stratigraphy, and the associated Harris Matrix method, to the analysis of the fabric of standing buildings.

The concept of the stratigraphic analysis of standing buildings is not a new one, indeed basic stratigraphic principles were being applied to buildings long before they began to be widely applied to archaeological excavations. Of particular note is the methodology adopted by Thomas Rickman in the researching of his 1817 publication *An Attempt to Discriminate the Styles of Architecture in England*, a seminal work in which, having applied archaeological methods to the fabric of buildings, he divided English architecture into the Norman, Early English, Decorated and Perpendicular periods[5].

Rickman relied upon the construction of relative chronologies through studying the stratigraphical relationships of buildings that exhibited several different architectural styles and correlating them with dateable examples. The most celebrated example of his work is the church of St. Peter, Barton-on-Humber (Figure 8), where he demonstrated that the tower must be of Anglo-Saxon date, due to the fact it is surmounted by a belfry of a clearly different style, which could definitely be assigned to the Saxo-Norman period[6].

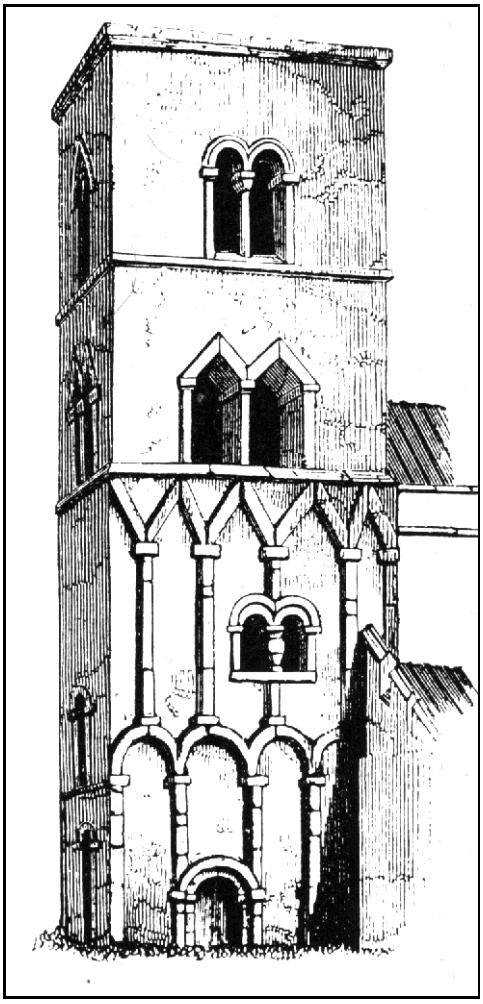

FIGURE 8. THE TOWER OF ST. PETER'S, BARTON-ON-HUMBER[7]

[1] Morris 1994, p.14.

[2] Ibid.

[3] Ibid. This is largely related to the nature of archaeological funding during the 1970s, which Morris discusses in some depth.

[4] Aston 2000, p.89.

[5] Rodwell 1989, p.25.

[6] Rodwell and Rodwell 1982, p.286.

[7] Rodwell 1989, p.23, Figure 8. This slightly inaccurate drawing by Orlando Jewitt was published in the 1819 edition of Rickman's work.

The application of the stratigraphic methods used by Rickman and others throughout the nineteenth century, coupled with the work of historians, resulted in the construction of 'reasonably complete and reliable architectural histories ... from Norman times until the present'[1]. Their creation was greatly aided by the existence of numerous documents with which individual building phases could be correlated, however, these histories falter with regard to pre-Conquest times, for which such sources are scarce. This factor alone is largely responsible for the intensive concentration upon the study of the fabric of Anglo-Saxon buildings, primarily churches, which gave rise to a much more detailed archaeological analyses of the stratigraphy of standing buildings[2].

In their three volume publication *Anglo-Saxon Architecture*[3] Harold and Joan Taylor presented 'a comprehensive collection of the surviving Anglo-Saxon features in English churches'[4]. Coining the phrase 'structural criticism'[5] to describe their methodology, they cite the work of Rickman as continuing to be particularly valid to the study of architectural history[6] and elsewhere describe how the stratigraphic units of buildings can be recognised by the identification of features such as straight joints between patches of building fabric, changes in the nature of the fabric itself and building elements that have been partially destroyed by the insertion of later elements[7].

Encouraged by the work of Harold Taylor, the 1970s saw the beginning of several projects that attempted to take a new approach to the archaeological study of buildings through the detailed recording of the fabric, with a continuing emphasis on churches. Small scale excavations at St Mary's, Deerhurst, during 1971-72 resulted in the broadening of the work to include a re-evaluation of the fabric of the building that continued until 1984[8]. At Rivenhall, St. Mary's church was included within a larger project, subsequent plaster stripping and close scrutiny of the fabric revealed that, far from being the result of a nineteenth century rebuilding as had been previously thought, the building had considerable Anglo-Saxon elements to its fabric[9]. At the deserted medieval village of Wharram Percy the ruinous St. Martin's church was excavated between 1962 and 1974 and followed up by a period of detailed architectural analysis of the standing fabric of the building between 1977 and 1979[10]. Fittingly, after being declared redundant in 1978, the fabric of St. Peter's, Barton-on-Humber, (once the site of Rickman's work) was recorded in great detail until 1984 and, when combined with additional excavation data, several distinct phases of the churches development were identified, ranging from the late tenth century onwards[11].

---

1 Taylor 1976, p.4.

2 Ibid. p.5.

3 Taylor and Taylor 1965a, 1965b and 1978.

4 Taylor and Taylor 1965a, p.2.

5 Taylor 1972.

6 Taylor and Taylor 1965a, pp. 2-3.

7 Taylor 1972 and 1976. Taylor vehemently promoted the need for more detailed study of Anglo-Saxon buildings throughout the 1970s.

8 Rahtz 1976. Rahtz and Watts 1997.

9 Rodwell and Rodwell 1985, pp. 1-11.

10 Aston 1985, pp. 67-70.

11 Rodwell and Rodwell 1982.

However, one of the most significant, and certainly the most meticulous, building surveys to date is that undertaken by John James at Chartres Cathedral. During many years of full time study he made literally millions of measurements of the minutiae of the building's fabric, concentrating on the nave, choir and transepts - all of which had been rebuilt in the fifty years following a fire in 1194[1]. With detailed diagrammatic results stretching to six hundred pages, spread over two volumes, his publication *The Contractors of Chartres*[2] is a truly staggering body of work in which James is able to demonstrate that, through close attention to stratigraphic detail and reference to historical documentation, it was possible to identify forty individual building campaigns within the fifty year period being studied.

Projects such as those discussed above have served to demonstrate very clearly the valuable results that the detailed analysis and recording of the fabric of standing buildings can produce, although there is a tendency amongst them to approach the analysis of the fabric of the building as being separate from the analysis of archaeological stratification. This is in part due to the recording methods employed. In 1989 Rodwell wrote at length about the standard building recording methods that should be employed in church archaeology and his methodology continues to be followed today. Although the recording of 'modifications' to the fabric is briefly discussed[3], the emphasis is firmly placed on recording the extent of the spatial relationships between structural components through stone-by-stone recording, photography and photogrammetry[4] and not on the stratigraphic relationships between them. A similar emphasis on these spatial methods is to be found in the Royal Commission on the Historical Monuments of England's *Recording Historic Buildings: A Descriptive Specification*[5], the professional guide to standards in building recording. As Martin Davies is quick to point out, although these methods produce high quality visual records of the fabric, they 'fail to record a host of other information [such as] the evidence of sequential development and dating'[6], all of which are crucial to understanding the development of a structure.

It would appear that, as was the case with early section drawings[7], with these methods the extents of depositional units are clearly recorded whilst non-depositional units, such as interfaces[8], are overlooked and as such the stratigraphic sequence will ultimately be incomplete. In the case of archaeological excavation this problem was remedied by the introduction of more detailed recording methods to complement the section drawings, and a similar approach has been taken to masonry recording, albeit in the context of archaeological stratification. To complement their Context Recording Sheet, the Museum of London Archaeology Service have also developed a Masonry Recording Sheet (Figure 9) for the recording of buried structures such as 'wells, drains, pit linings, crypts, hypocaust systems, monumental structures and buildings'[9]. Although developed for subsurface remains, the data it requests is especially suitable for the study of standing masonry, however,

---

1 James 1981a, p.9.

2 James 1981a and 1981b.

3 Rodwell 1989, p.96.

4 Ibid. Chapter 6.

5 RCHME 1996.

6 Davies 1993.

7 Page 16 above.

8 Page 17 above.

9 M.O.L.A.S. 1994, Section 3.3, Recording Masonry Structures.

difficulties arise in that, whereas subsurface structures can be excavated to ascertain stratigraphic relationships, the non-destructive nature of standing building recording means that relationships will be determined in a more superficial manner and cannot be said to be as definite as they would be had they been subjected to total excavation and recording[1].

A detailed single context recording approach was taken to the recording and analysis of Berry Pomeroy castle, Devon, between 1988 and 1996. There, 'each architectural feature ... was assigned an individual reference number and site context record'[2] consisting of a written description, drawings and a record of the relationships between contexts. The stratigraphic relationships used in the recording, specifically 'integral', 'inserted', 'abutting' and 'contained'[3], differ from those that would be applied to archaeological stratigraphy, and as such do not allow their excavations and architectural analysis to be easily integrated, but nevertheless a relative sequence for the building was constructed. Whilst this work serves to demonstrate that standing buildings do not necessarily conform to the same laws of stratigraphy as subsurface archaeology, this does not mean that a closer correlation between the two types of stratification cannot be achieved.

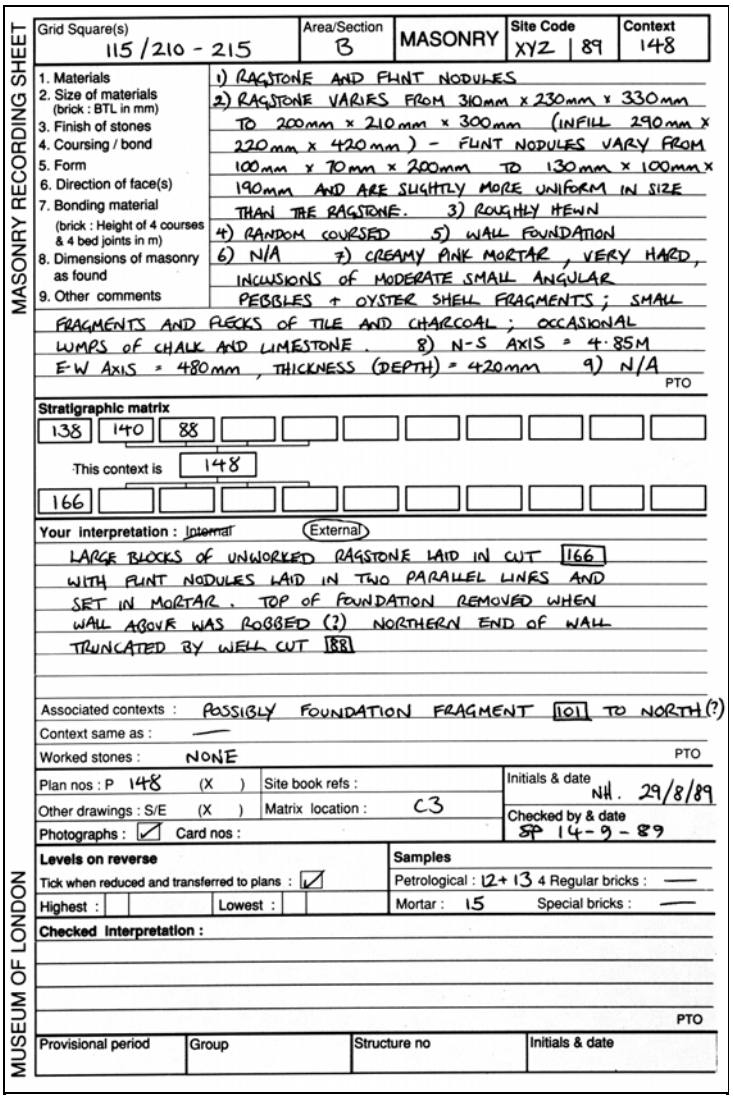
MASONRY RECORDING SHEET

Grid Square(s): 115/210 - 215 | Area/Section: B | MASONRY | Site Code: XYZ | 89 | Context: 148

1. Materials: 1) RAGSTONE AND FLINT NODULES
2. Size of materials (brick : BTL in mm): 2) RAGSTONE VARIES FROM 310mm x 230mm x 330mm TO 200mm x 210mm x 300mm (INFILL 290mm x 220mm x 420mm) - FLINT NODULES VARY FROM 100mm x 70mm x 200mm TO 130mm x 100mm x 190mm AND ARE SLIGHTLY MORE UNIFORM IN SIZE THAN THE RAGSTONE.
3. Finish of stones: 3) ROUGHLY HEWN
4. Coursing / bond: 4) RANDOM COURSED
5. Form: 5) WALL FOUNDATION
6. Direction of face(s): 6) N/A
7. Bonding material (brick : Height of 4 courses & 4 bed joints in m): 7) CREAMY PINK MORTAR, VERY HARD, INCLUSIONS OF MODERATE SMALL ANGULAR PEBBLES + OYSTER SHELL FRAGMENTS; SMALL FRAGMENTS AND FLECKS OF TILE AND CHARCOAL; OCCASIONAL LUMPS OF CHALK AND LIMESTONE.
8. Dimensions of masonry as found: 8) N-S AXIS = 4·85M E-W AXIS = 480mm, THICKNESS (DEPTH) = 420mm
9. Other comments: 9) N/A

PTO

Stratigraphic matrix: 138 | 140 | 88

This context is 148

166

Your interpretation : ~~Internal~~ (External)
LARGE BLOCKS OF UNWORKED RAGSTONE LAID IN CUT [166] WITH FLINT NODULES LAID IN TWO PARALLEL LINES AND SET IN MORTAR. TOP OF FOUNDATION REMOVED WHEN WALL ABOVE WAS ROBBED (?) NORTHERN END OF WALL TRUNCATED BY WELL CUT [88]

Associated contexts : POSSIBLY FOUNDATION FRAGMENT [101] TO NORTH (?)
Context same as : —
Worked stones : NONE

PTO

Plan nos : P 148 (X) | Site book refs : | Initials & date NH. 29/8/89
Other drawings : S/E (X) | Matrix location : C3 | Checked by & date SP 14-9-89
Photographs : ☑ | Card nos :

Levels on reverse: Tick when reduced and transferred to plans : ☑ | Highest : | Lowest :

Samples: Petrological : 12+13 | 4 Regular bricks : — | Mortar : 15 | Special bricks : —

Checked Interpretation :

PTO

Provisional period | Group | Structure no | Initials & date

MUSEUM OF LONDON

[1] Rodwell 1986, p.156.

[2] Brown 1998, p.3.

[3] Ibid.

FIGURE 9. M.O.L.A.S.'S SAMPLE MASONRY RECORDING SHEET[1]

ARCHITECTURAL COMPATIBILITY WITH THE LAWS OF ARCHAEOLOGICAL STRATIGRAPHY

In their work at the Bixby Site, David Simmons *et al.*[2] integrated architectural and archaeological recording of a nineteenth century smithy and its lands in Massachusetts to create what they dubbed a 'Total Site Matrix'[3]. In combining data collected during excavation of the site and the dismantling of the building, they stressed the need for a 'specifically revised version of the system employed in the traditional archaeological investigation of the site'[4] to record the architectural contexts encountered, but unfortunately go no further in elaborating on their method throughout the paper.

By contrast, Martin Davies is much more forthcoming. In his paper[5] he demonstrates how he used two Australian colonial house sites of 'varying scale and complexity[6]' to establish that 'the [Harris] matrix provides a firm methodological footing for structural investigations[7]' and discusses the difficulties encountered in applying the *Law of Superposition*[8] to standing buildings. As Rodwell also notes, unlike subsurface stratification, 'there are many circumstances in which the older work is found to have been underlaid by newer work'[9] and as such the basic principle that the lower strata are the oldest does not hold true. Davies addresses this by suggesting that where possible chronological factors should be used alongside the stratigraphic factors to determine the inherent stratigraphic sequence, and Harris writes of the problem that 'we must occasionally determine which way is 'up''[10], citing the example of plastering a ceiling, where the plasterer can be said to be working 'upside down'[11]. Clearly then, the *Law of Superposition* can still be applied, although it requires a more considered application than simply assuming the lower contexts to be older.

In her 1997 paper[12], Heather Harvey describes the *Laws of Original Horizontality* and *Original Continuity* as being 'particularly inadequate when applied to architectural remains'[13] due in large part to their development from geological principles and the fact that architectural stratigraphy is built in defiance of the natural forces such as gravity that cause archaeological strata to tend towards the horizontal[14]. Harvey proposes a *Law of Original Consolidation* to replace them, explaining that in the case of buildings it is not gravity and the surrounding strata that define the shape a context, but the deliberate intentions of the creator, giving rise to the

---

1 M.O.L.A.S. 1994, Figure 24.

2 Simmons, Stachiw, & Worrell 1993, 'The Total Site Matrix'. In Harris, Brown and Brown 1993, pp.181-197.

3 Ibid.

4 Simmons, Stachiw, & Worrell 1993, p.182.

5 'The application of the Harris Matrix to the recording of standing structures'. In Harris, Brown and Brown 1993, pp.167-180.

6 Ibid., p.179.

7 Ibid.

8 Ibid. pp. 168-169.

9 Rodwell 1989, p.72.

10 Harris 1989, p.31.

11 Ibid.

12 'Structures as Stratified Remains'. Harvey 1997.

13 Ibid. p.11.

14 Ibid.

axiom that *'Architectural features are formed to a deliberate shape or form without regard for a pre-existing basin of deposition'*[1].

Through the application of the modified *Law of Superposition* and Harvey's new *Law of Original Consolidation* to a recording of the fabric of a building that notes all of the contexts and interfaces, it is possible to ascertain all of the superpositional relationships present in the manner shown in Figure 4, above. The subsequent application of the *Law of Stratigraphical Succession*, which remains unchanged in an architectural context, to these relationships then produces a stratigraphic sequence that can be symbolically represented as a Harris Matrix diagram, as is the case with archaeological stratigraphy (Figures 5 and 6, above). The resultant stratigraphic sequence diagram can then be phased in the established manner[2].

Clearly then, the Harris Matrix method is particularly suitable for the analysis of architectural stratification, despite different stratigraphic laws applying, and it allows for the easy integration of archaeological and architectural studies into a single stratigraphic sequence. Provided that the level of the fabric recording involved is detailed enough, and includes both depositional and non-depositional units, the compilation of the stratigraphic sequence should be relatively straightforward. However, unlike single context recording, which allows the stratigraphic relationships to be reconstructed very easily from the site records, extra attention needs to be paid to the exact nature of the architectural stratigraphic relationships whilst on site, particularly given the limitations of non-intrusive recording methods, and detailed records of each individual context and its relationships should be made and if possible the Harris Matrix diagram should be compiled whilst on site when easy reference can be made to the building itself.

In order to illustrate the methodology, the case study of the church of St. Mary the Virgin, Sedgeford, will now be presented, using data collected by the Sedgeford Historical and Archaeological Research Project, and a Harris Matrix diagram of the building's stratigraphic sequence compiled. Finally the methodology will be evaluated with a view to making improvements and developing it further.

---

[1] Ibid.

[2] See footnote 3, page 15.

CASE STUDY: ST. MARY THE VIRGIN'S, SEDGEFORD

The parish church of St. Mary the Virgin lies in the north west Norfolk parish of Sedgeford at grid reference TF 707 365 and since 1996 it has been the subject of a detailed programme of recording as a part of the ongoing work of the Sedgeford Historical and Archaeological Research Project. The 1999 season saw the completion of recording the building's fabric, a part of which consisted of a detailed recording of the visible stratigraphic contexts of the exterior, the interior being plastered. This data, and elevations of the church, are to be used to construct a relative stratigraphic sequence of the building's development that will be able to be correlated with an analysis of the historical documentation and the architectural details to create a chronological sequence as a future part of SHARP's work.

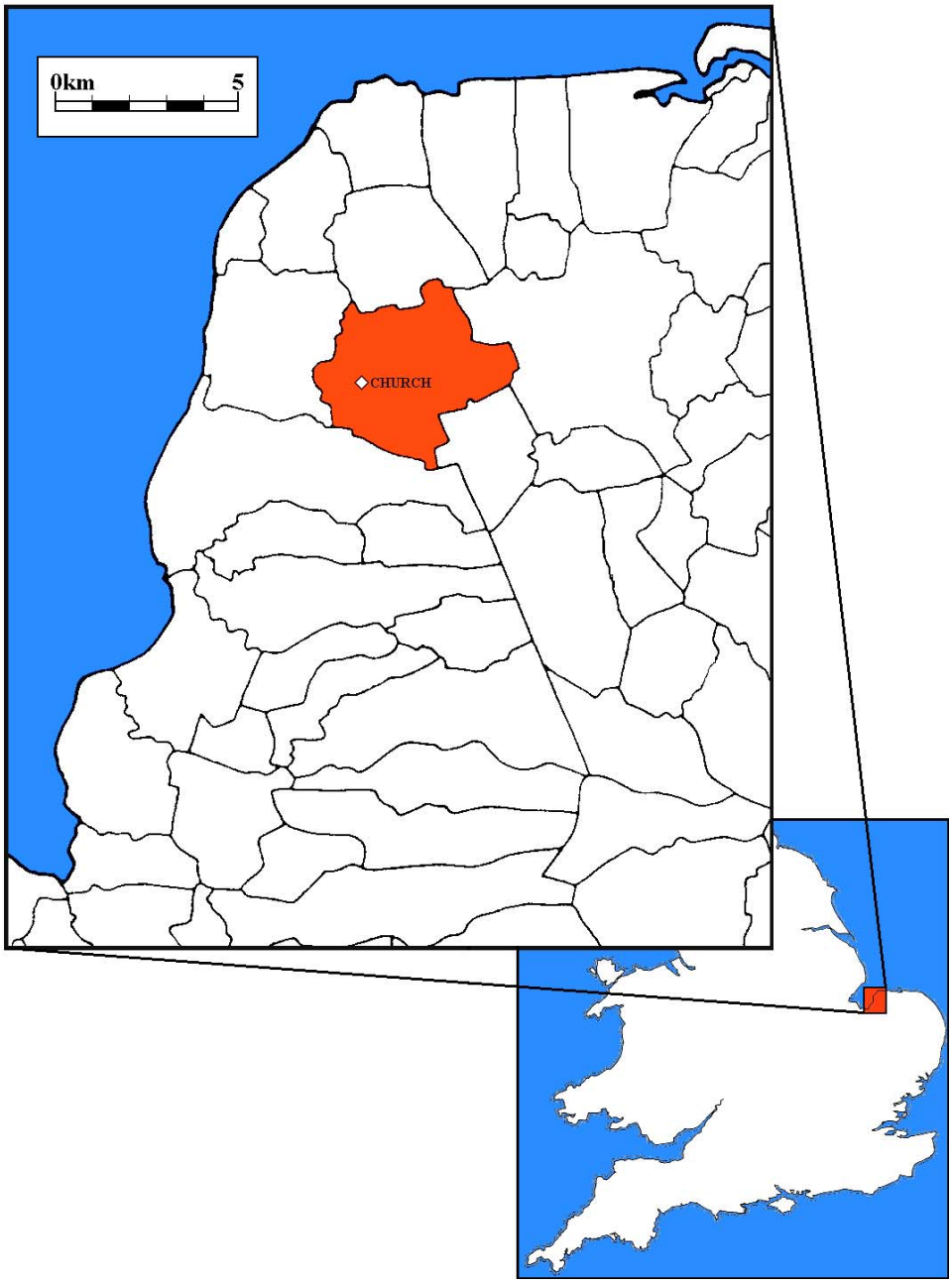

FIGURE 10. A DETAIL OF THE PARISHES OF NORTH WEST NORFOLK WITH SEDGEFORD HIGHLIGHTED IN RED. THE POSITION OF THE CHURCH OF ST. MARY THE VIRGIN IS MARKED BY THE WHITE DIAMOND.

Figures 12 to 15 show four elevations of Sedgeford church at a scale of 1:100 from which smaller elevations have been taken to create backgrounds for the superimposition of the building's stratigraphic units (Figures 16-30). Figure 11, overleaf, shows the floor plan of the church at a scale of 1:200 with the positions of the points from which these smaller elevations are taken marked onto it and lettered.

On the smaller elevation drawings, the outlines of deposits are shown in red and those of feature interfaces shown in blue. When there is not currently sufficient data to determine the existence of a feature interface red is used by default. Each stratigraphic unit is numbered and these numbers correspond with context records that contain details of each unit's location, dimensions, building materials and stratigraphic relationships. Although these records are extensive, for the purposes of compiling a stratigraphic sequence diagram only the stratigraphic relationships are relevant, the other details being more suited to the phasing of the sequence. As these relationships are all graphically represented in the stratigraphic sequence diagram, it has not been necessary to include them in a textual format.

The stratigraphic sequence diagram for all of the stratigraphic units shown in Figures 16 to 30 is shown in Figure 31. This diagram shows the relative chronology of the entire building and has no absolute chronological aspect. Stratigraphic units that form a part of the same building phase have been grouped together and, in order to aid clarity, the various arms of the sequence have been labelled with the numbers of the figures in which they appear and the part of the building they represent.

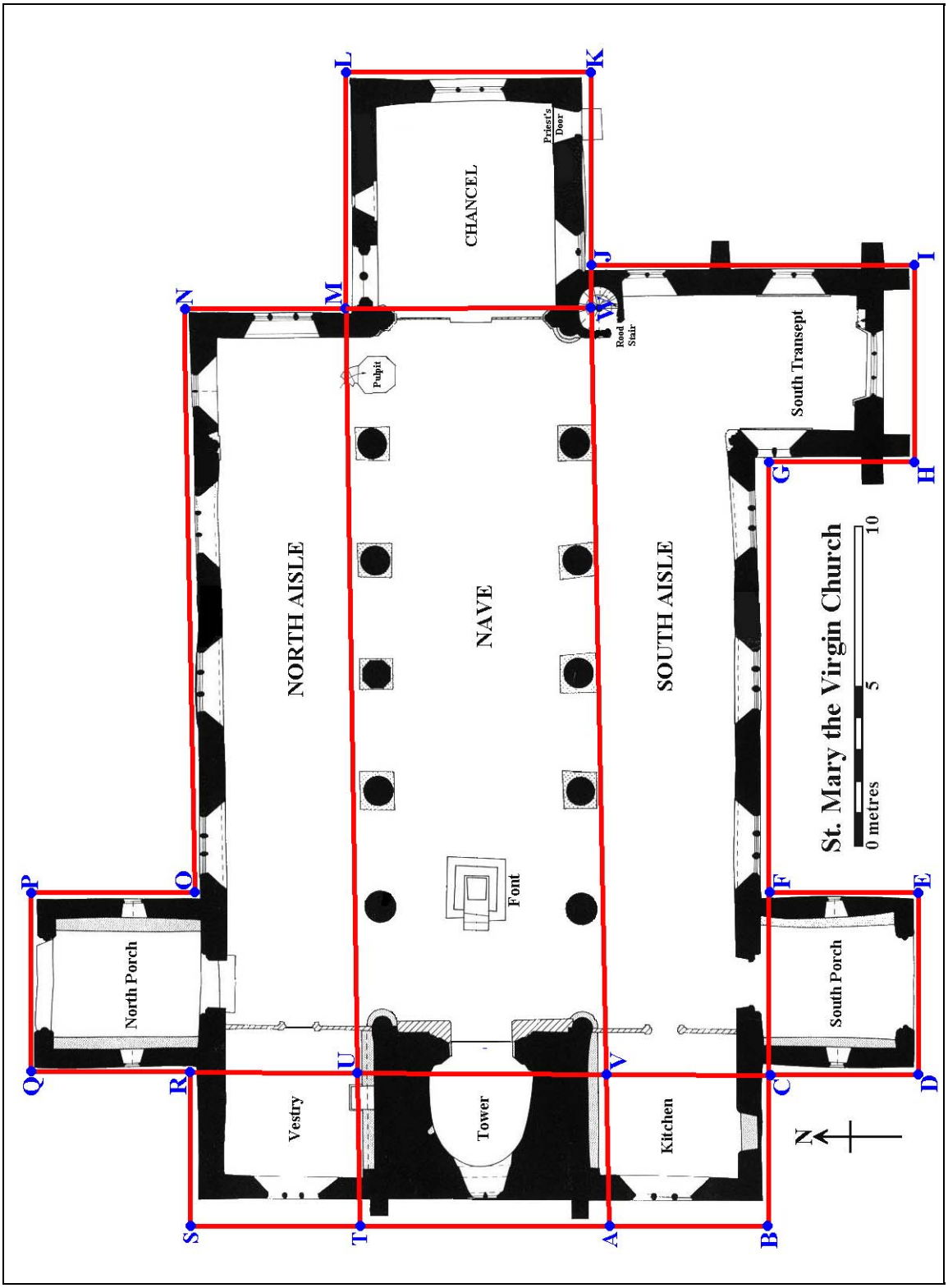

FIGURE 11. THE FLOOR PLAN OF SEDGEFORD CHURCH AT A SCALE OF 1:200.

CHURCH OF ST. MARY THE VIRGIN, SEDGEFORD

WEST-FACING ELEVATION

SH98 SMV, DRAWING SMV-004

DOMINIC ANDREWS 1998-9

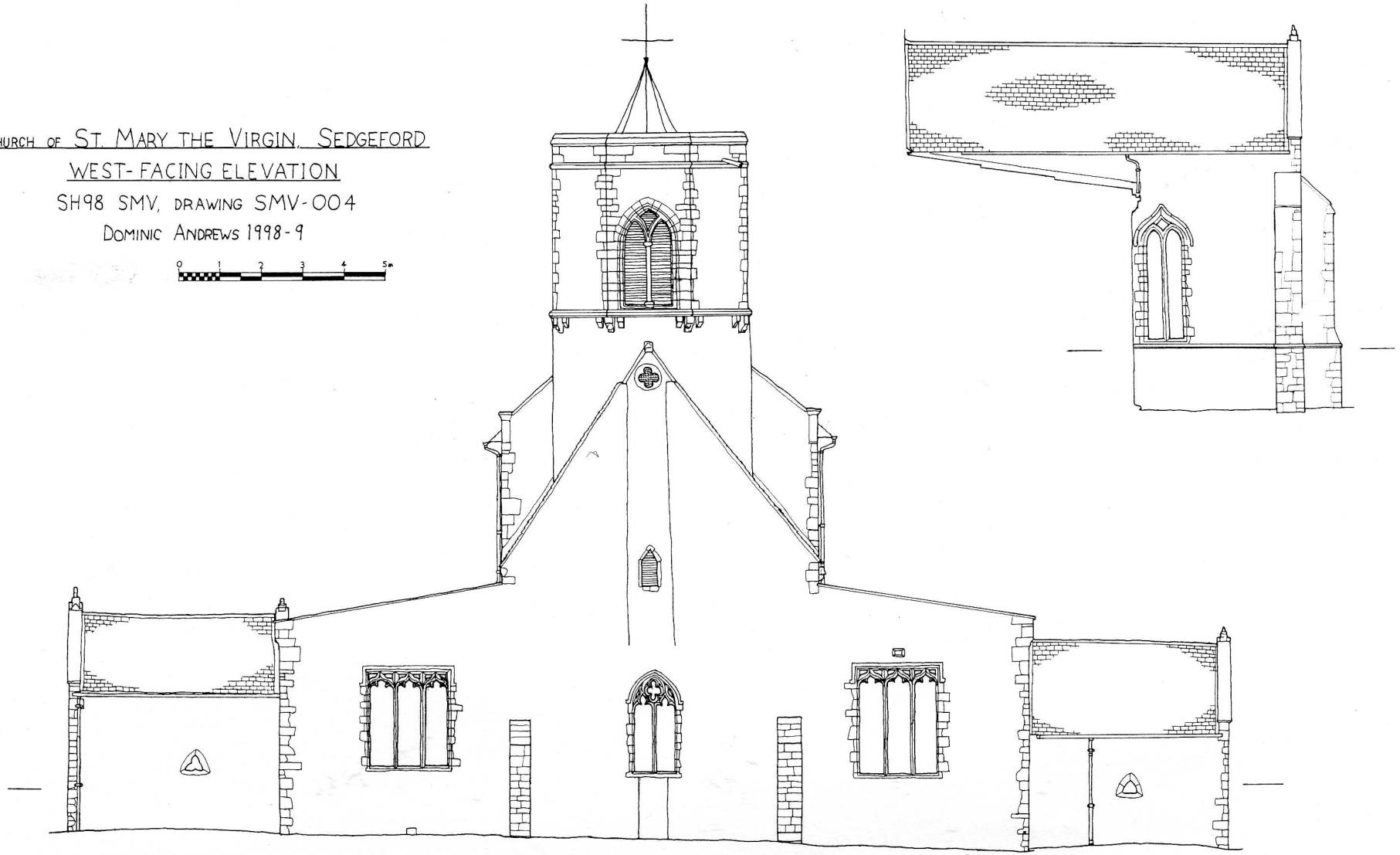

CHURCH OF ST. MARY THE VIRGIN, SEDGEFORD

SOUTH-FACING ELEVATION

SH98 SMV, DRAWING SMV-005

DOMINIC ANDREWS 1998-9

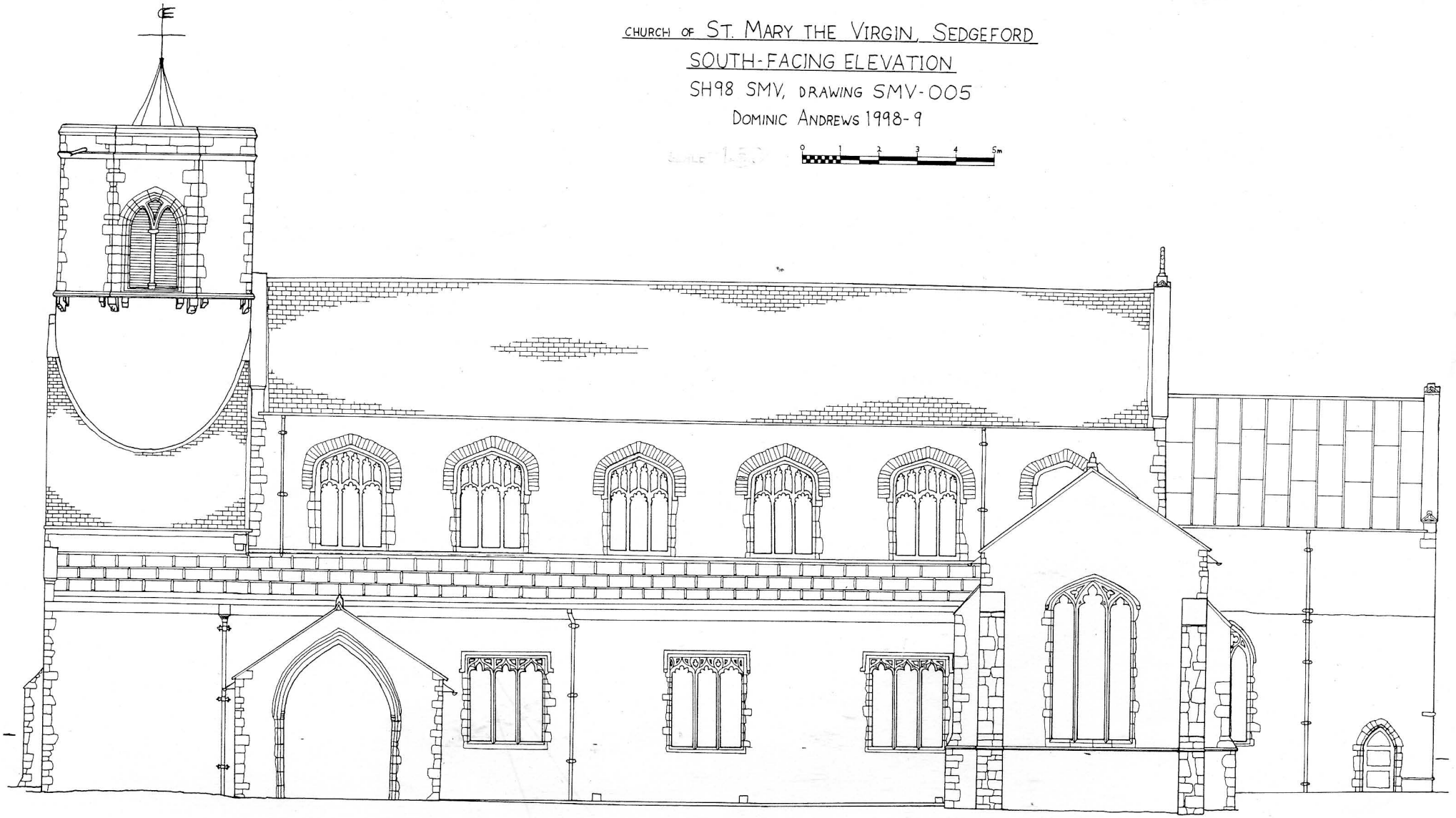

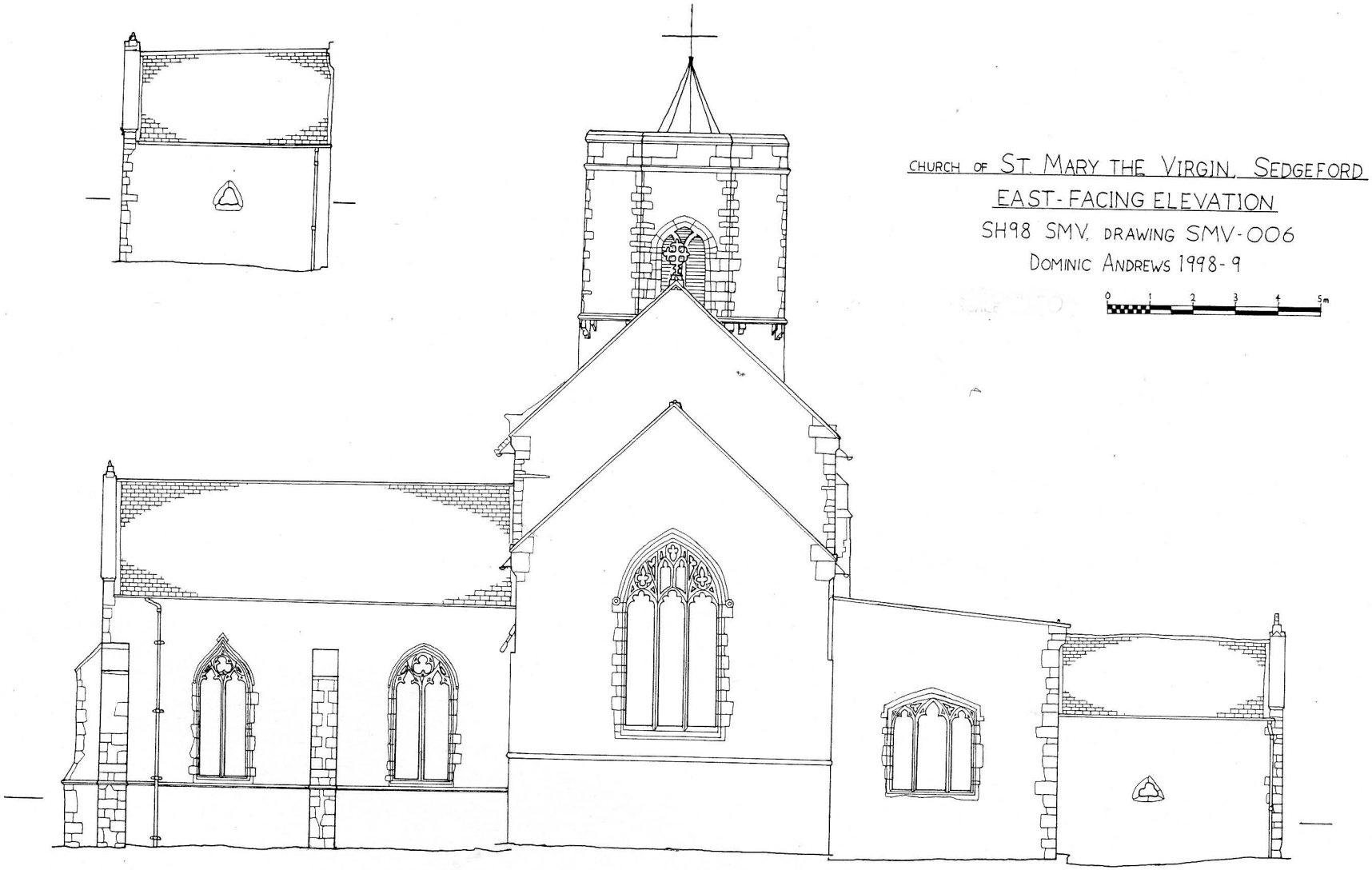
CHURCH OF ST. MARY THE VIRGIN, SEDGEFORD
EAST-FACING ELEVATION
SH98 SMV, DRAWING SMV-006
DOMINIC ANDREWS 1998-9
0 1 2 3 4 5m

CHURCH OF ST. MARY THE VIRGIN, SEDGEFORD

NORTH-FACING ELEVATION

SH98 SMV, DRAWING SMV-007

DOMINIC ANDREWS 1998-9

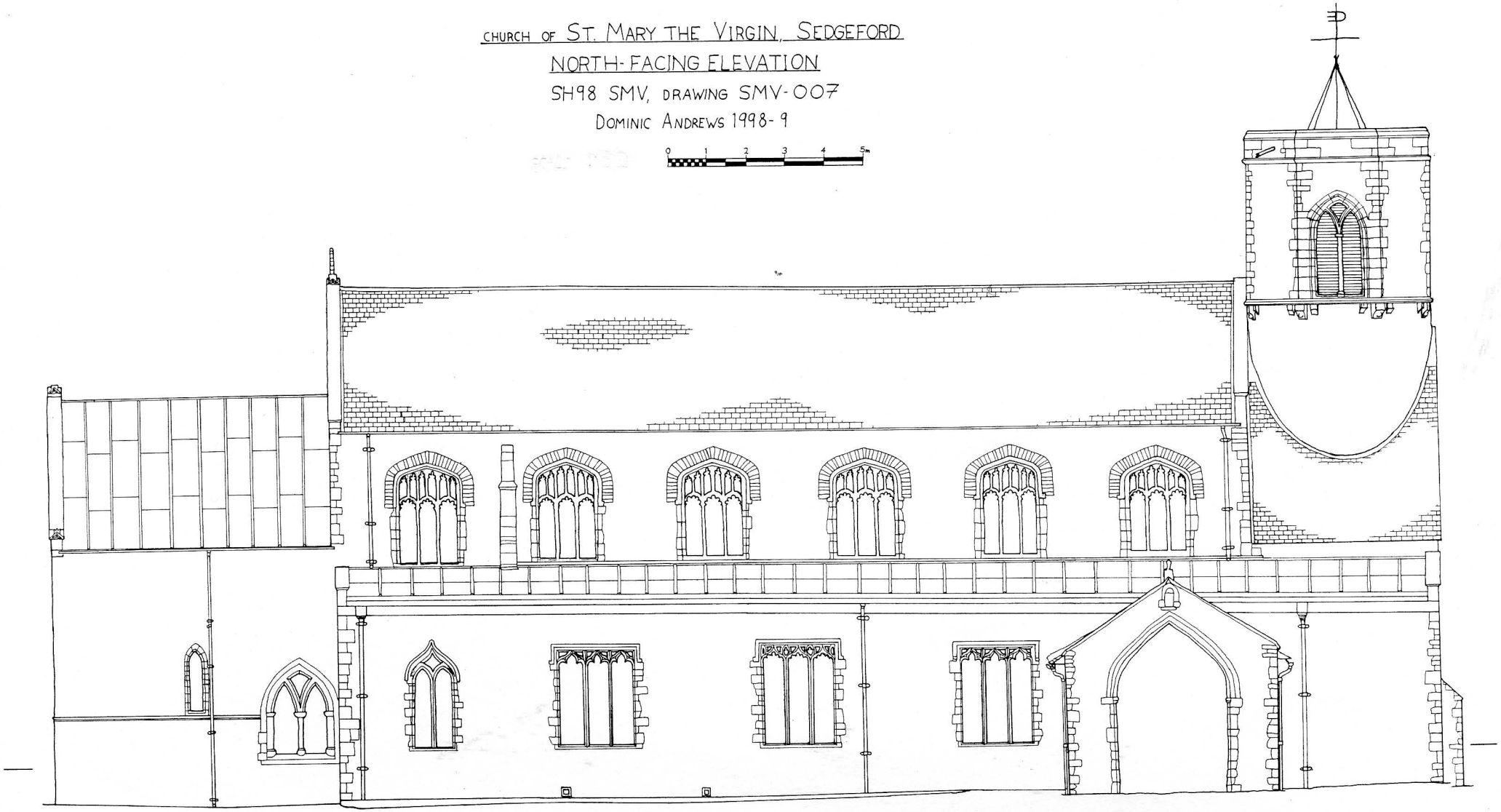

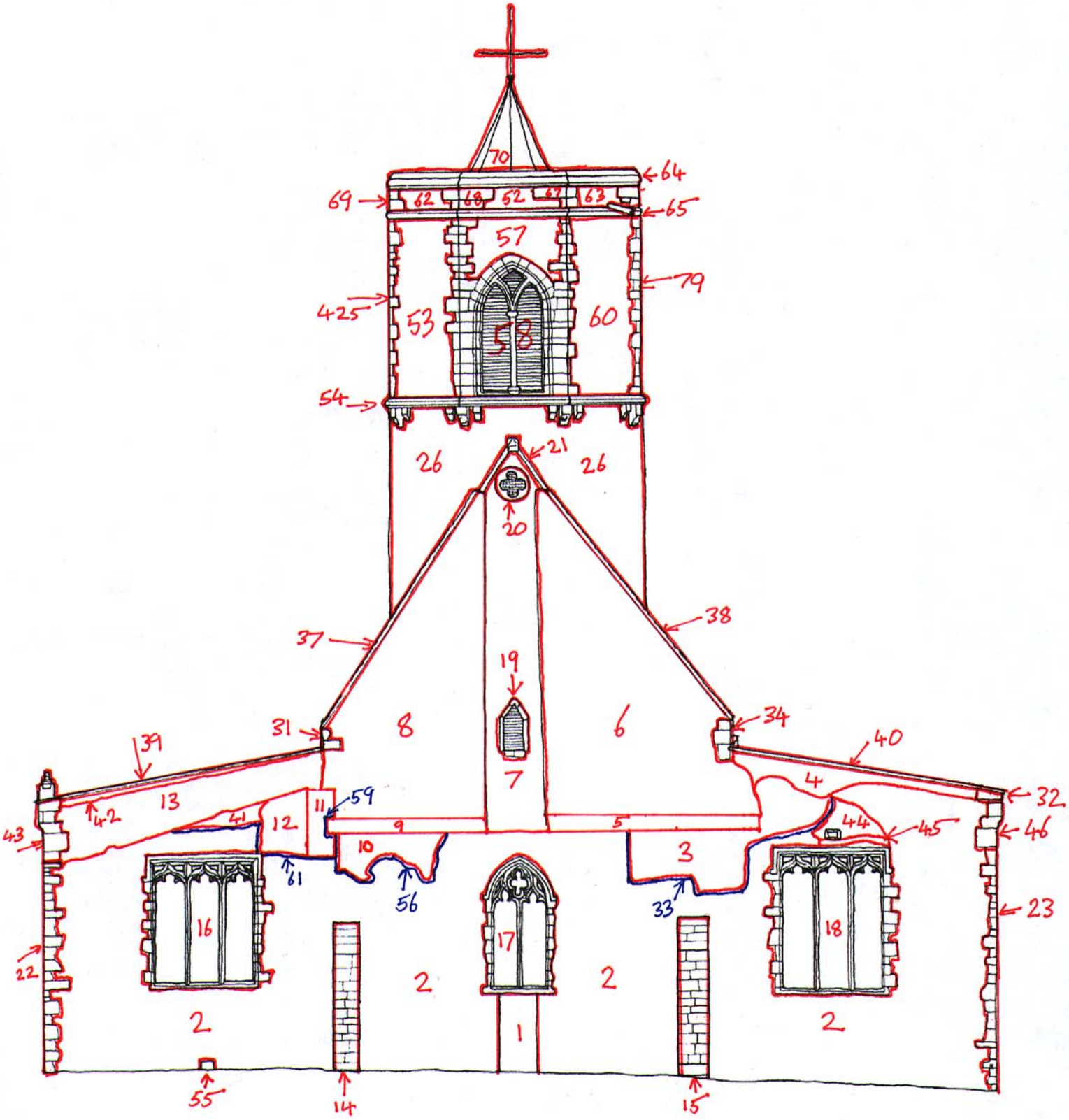

FIGURE 16. THE WEST WALL AND TOWER: ELEVATION S-T-A-B AT 1:100.

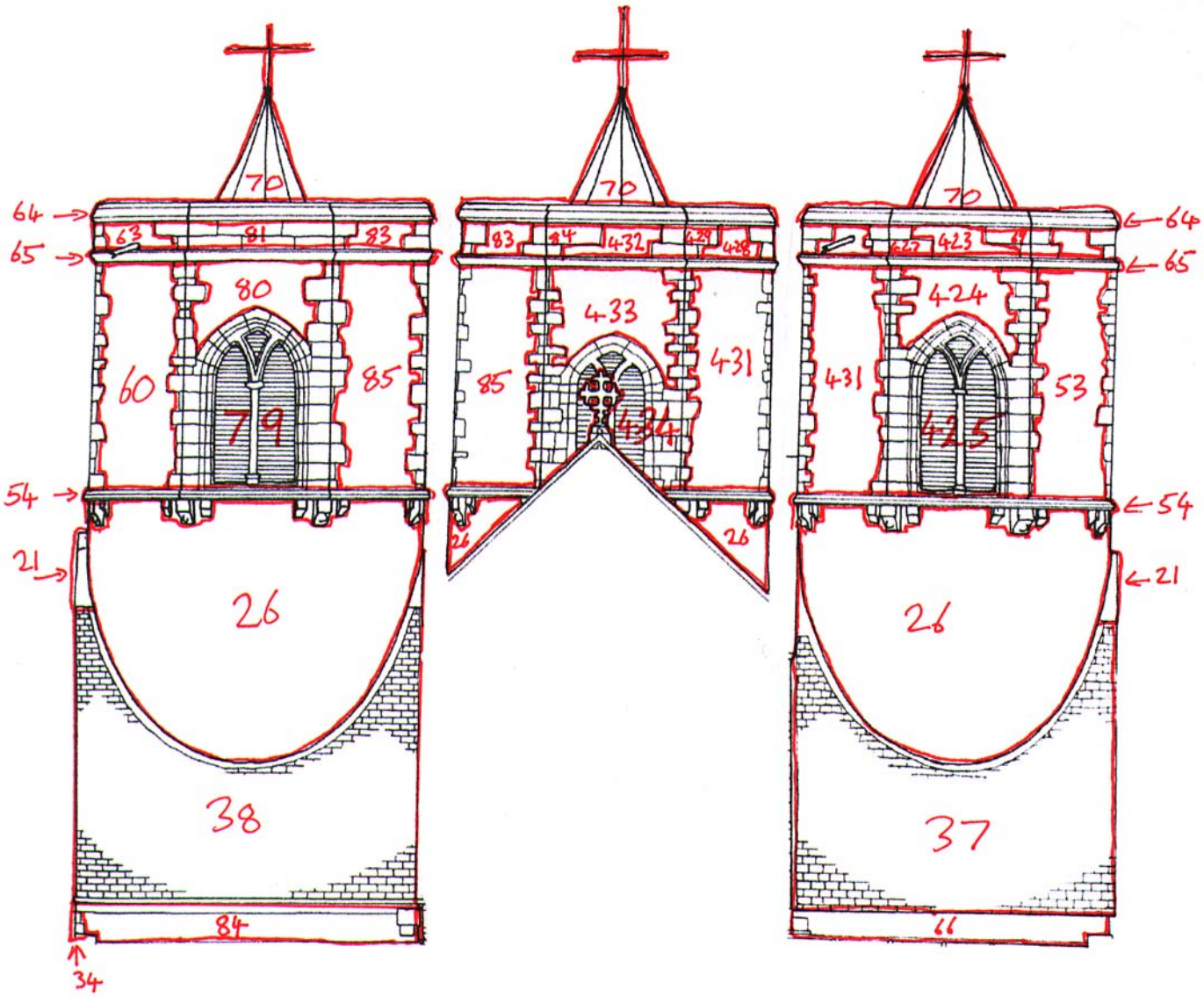

FIGURE 17. THE TOWER: ELEVATIONS A-V, V-U AND U-T AT 1:100.

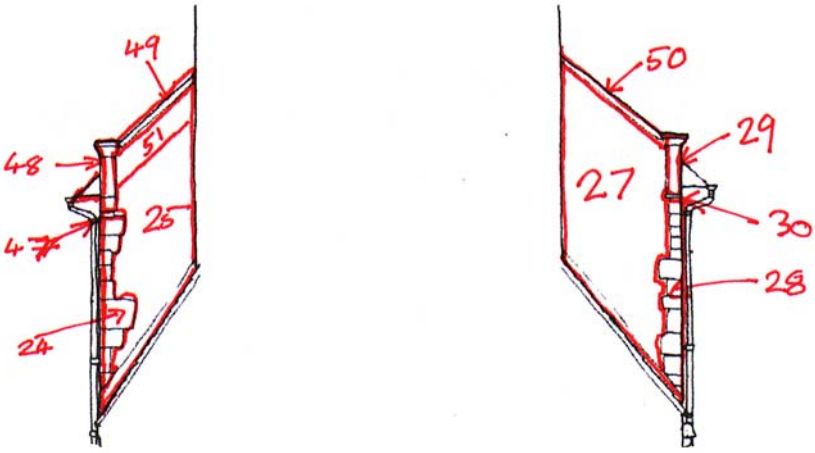

FIGURE 18. THE WEST WALL OF THE NAVE: ELEVATION R-U-V-C AT 1:100.

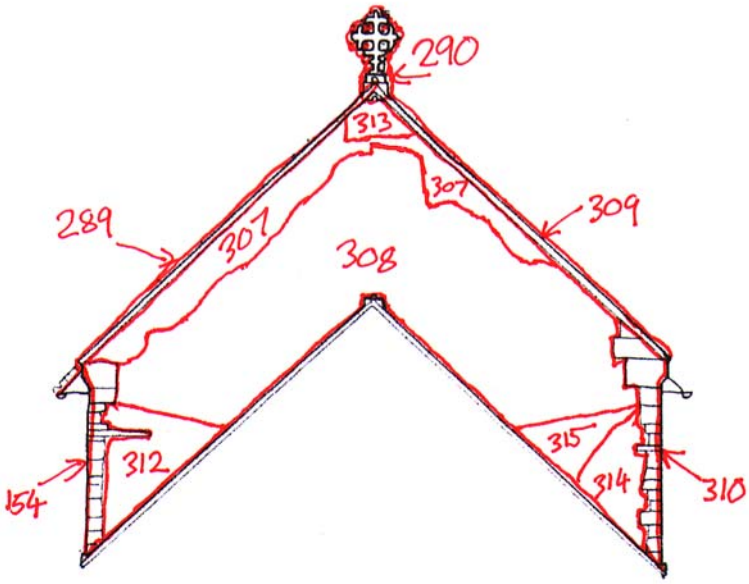

FIGURE 19. THE EAST WALL OF THE NAVE: ELEVATION W-M AT 1:100.

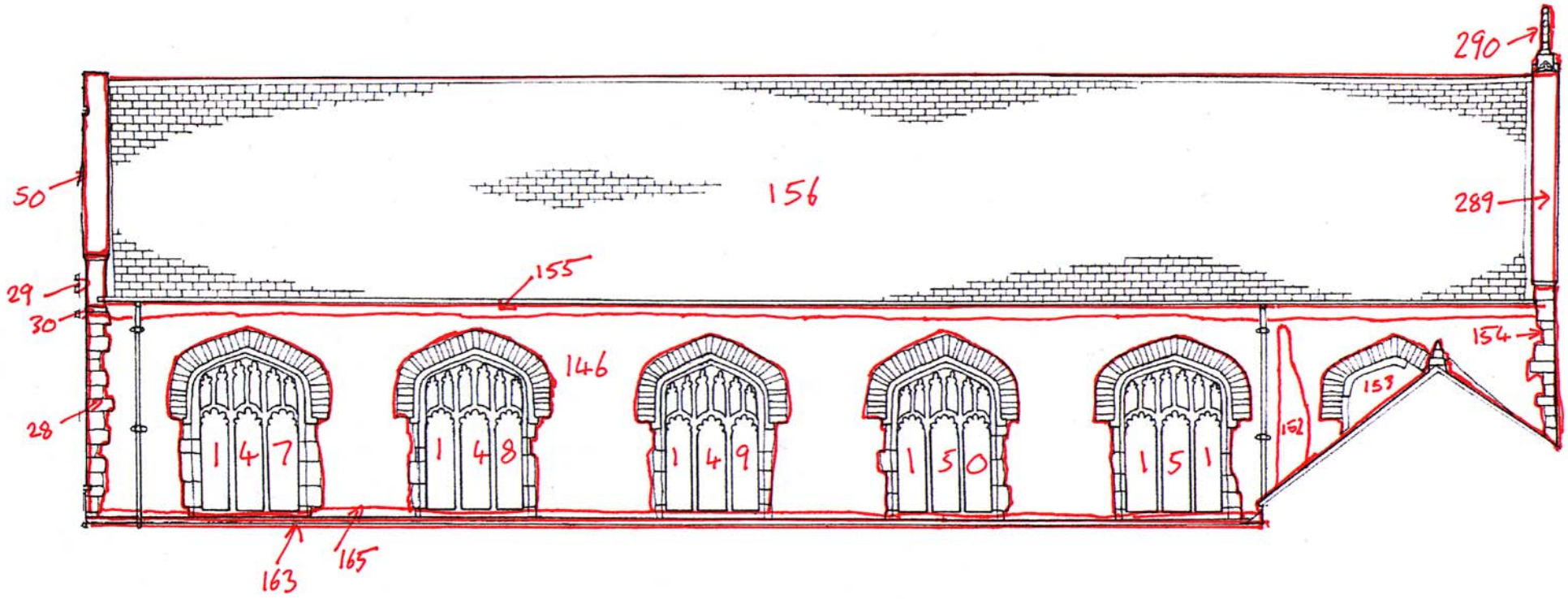

Figure 20. The South Wall of the Chancel: Elevation V-W at 1:100.

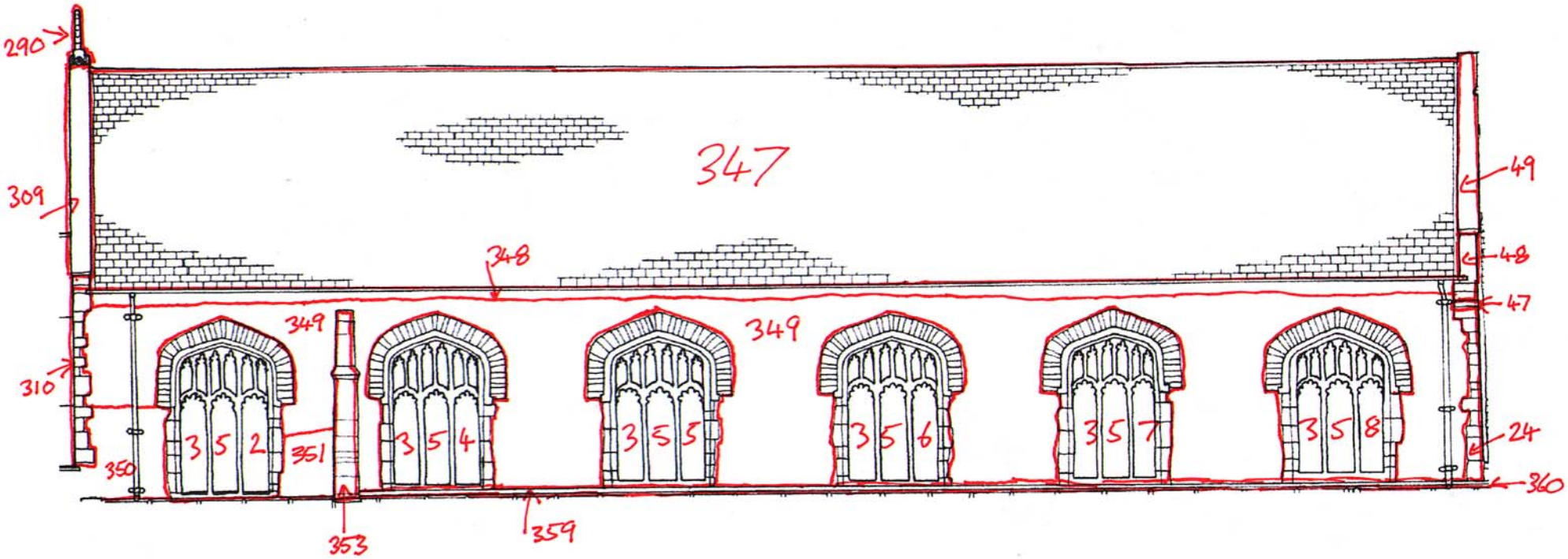

FIGURE 21. THE NORTH WALL OF THE CLERESTORY: ELEVATION M-U AT 1:100.

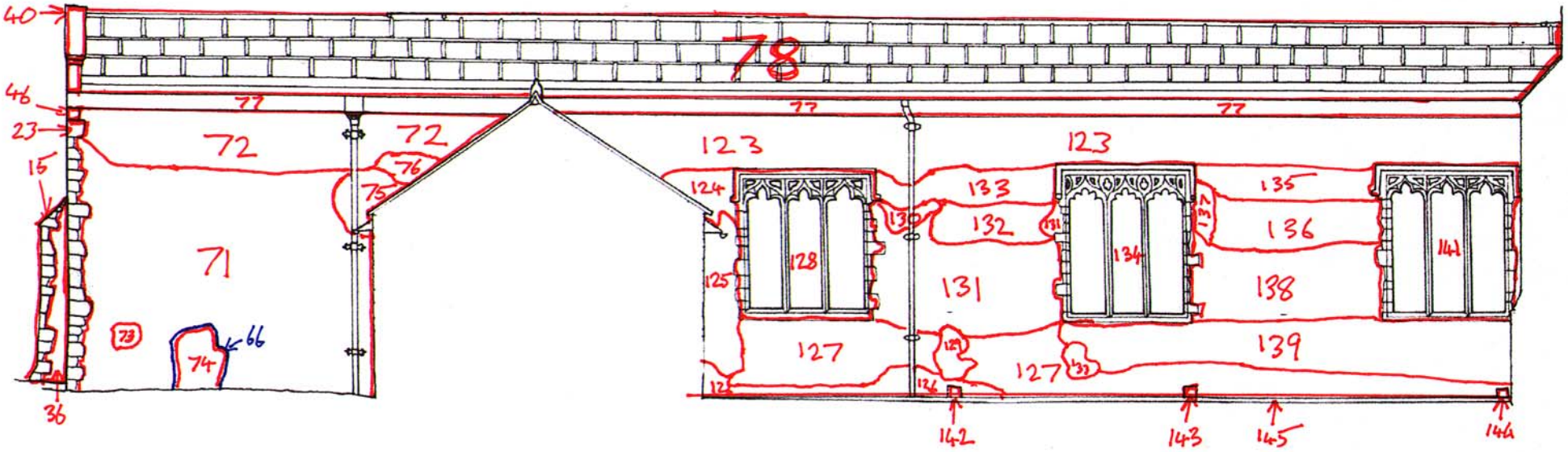

Figure 22. The South Wall of the South Aisle: Elevation B-C-F-G at 1:100.

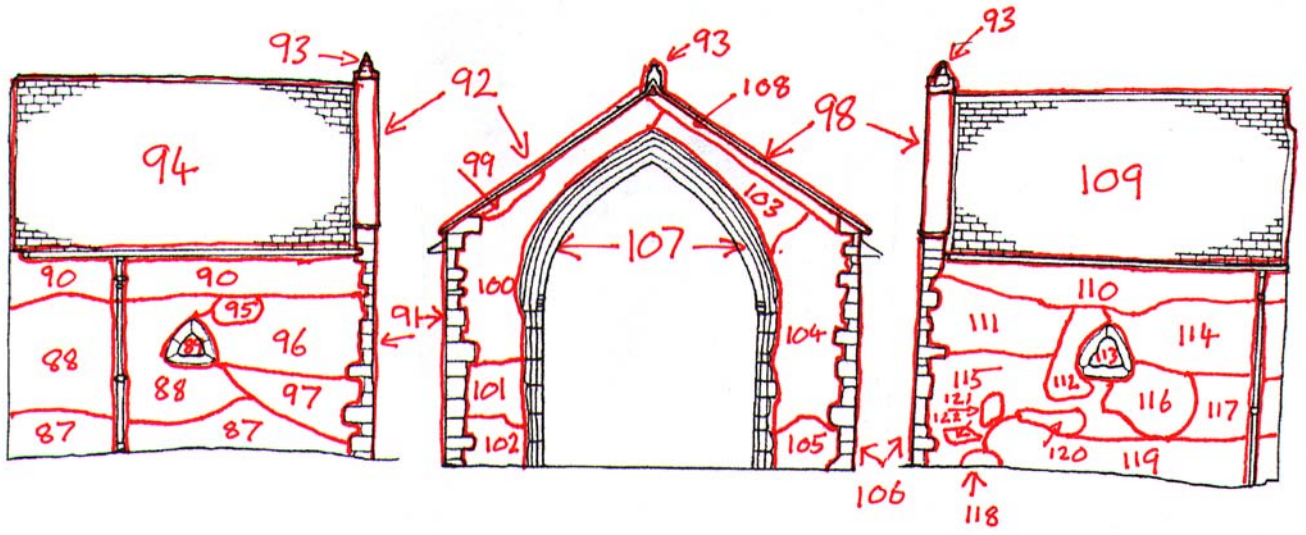

FIGURE 23. THE SOUTH PORCH: ELEVATIONS C-D, D-E AND E-F AT 1:100.

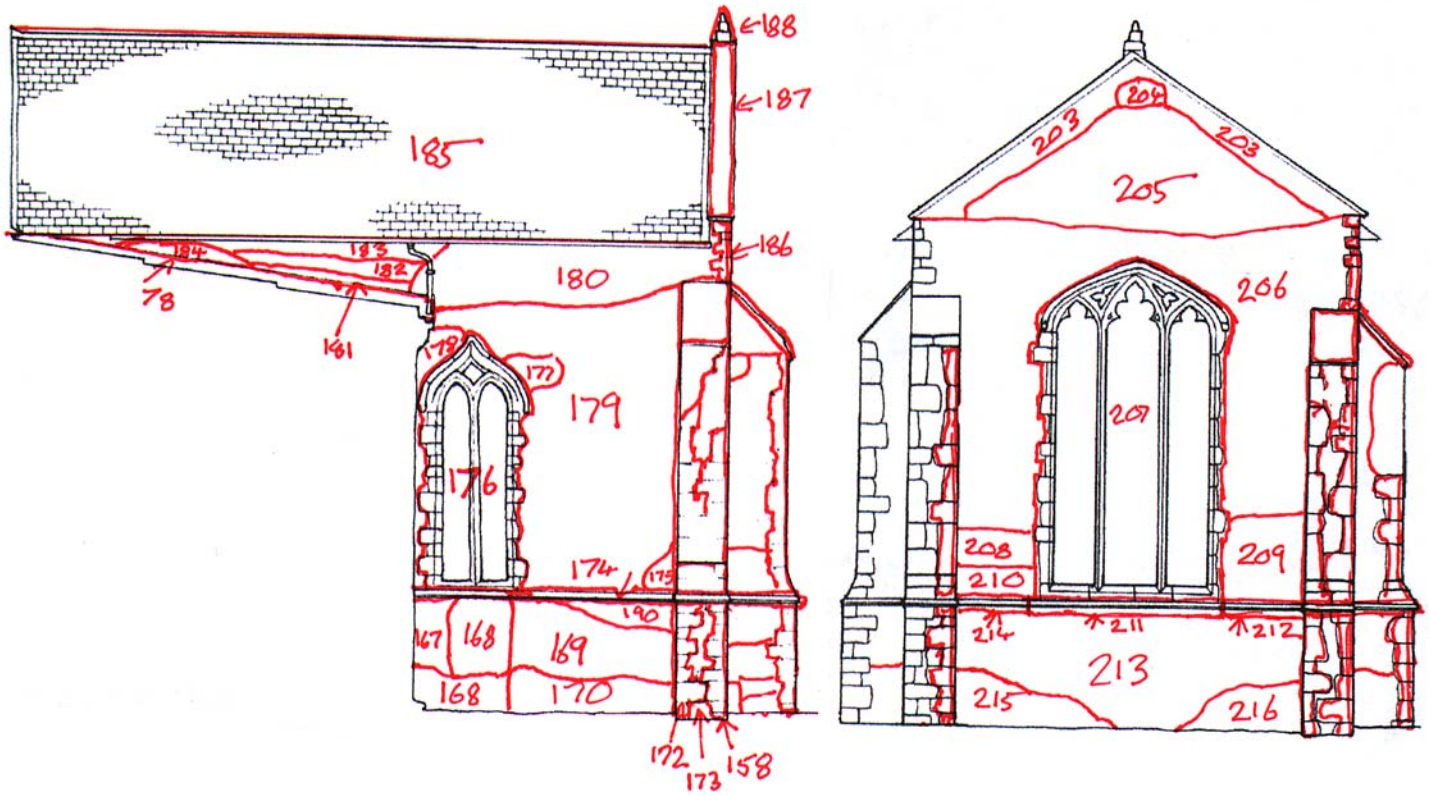

FIGURE 24. THE SOUTH TRANSEPT: ELEVATIONS G-H H-I AT 1:100.

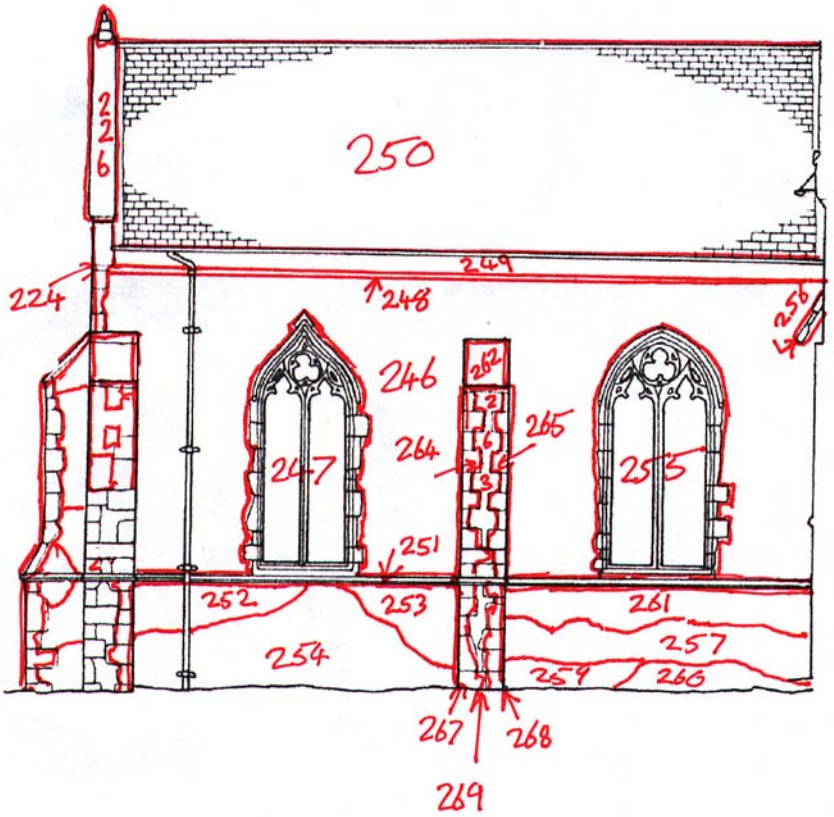

FIGURE 25. THE EAST WALL OF THE SOUTH TRANSEPT: ELEVATION I-J AT 1:100.

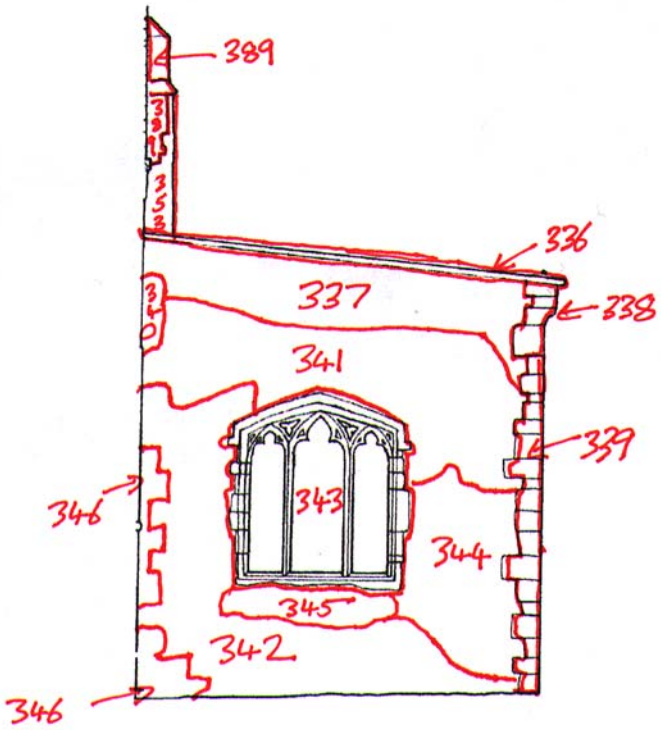

FIGURE 26. THE EAST WALL OF THE NORTH AISLE: ELEVATION M-N AT 1:100.

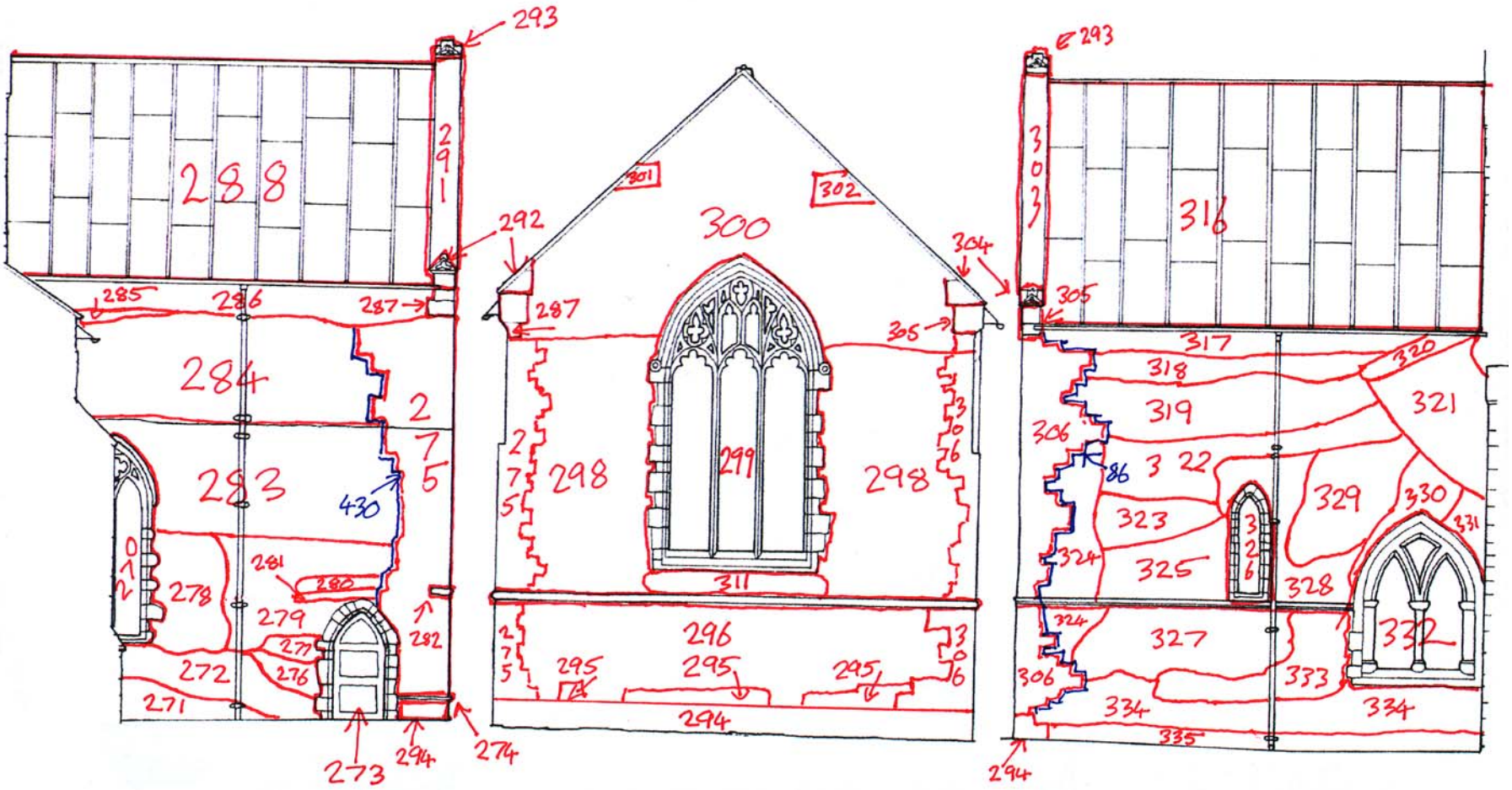

FIGURE 27. THE CHANCEL: ELEVATIONS J-K, K-L AND L-M AT 1:100.

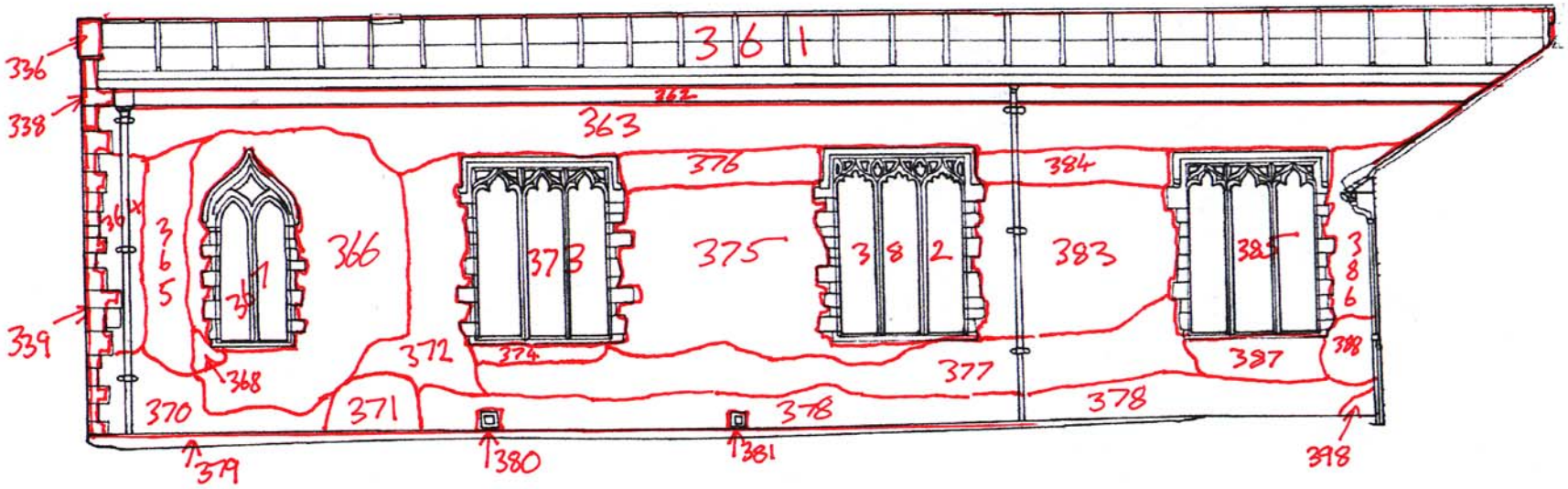

FIGURE 28. THE NORTH WALL OF THE NORTH AISLE: ELEVATION N-O AT 1:100.

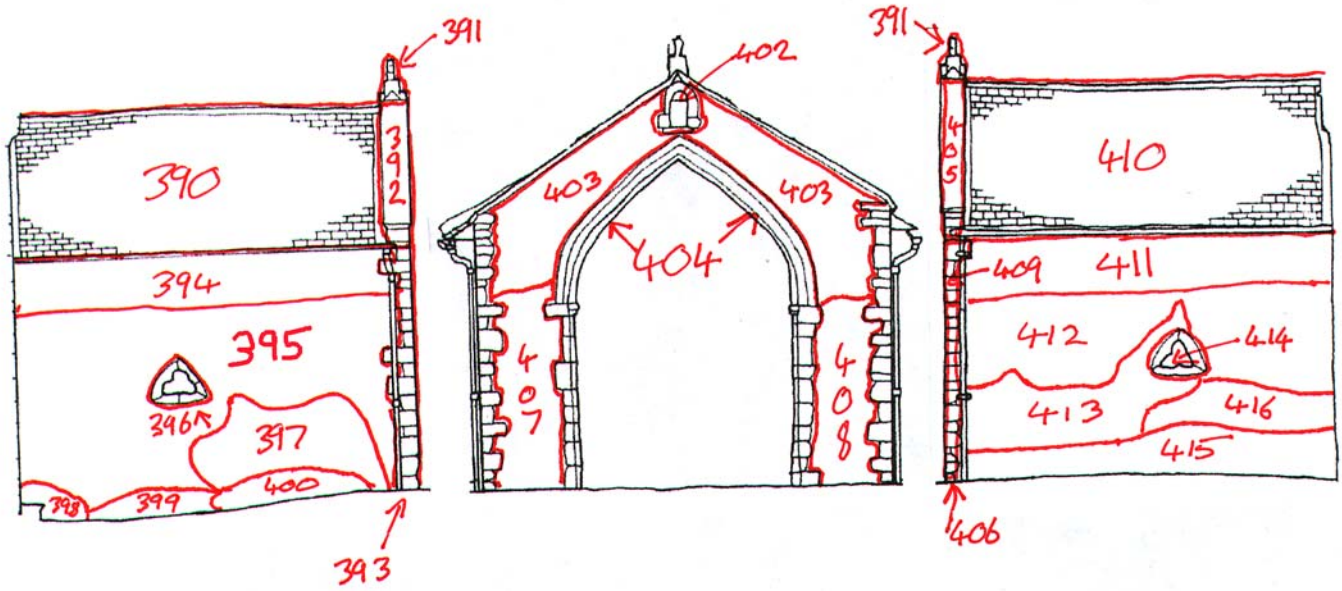

FIGURE 29. THE NORTH PORCH: ELEVATIONS O-P, P-Q AND Q-R AT 1:100.

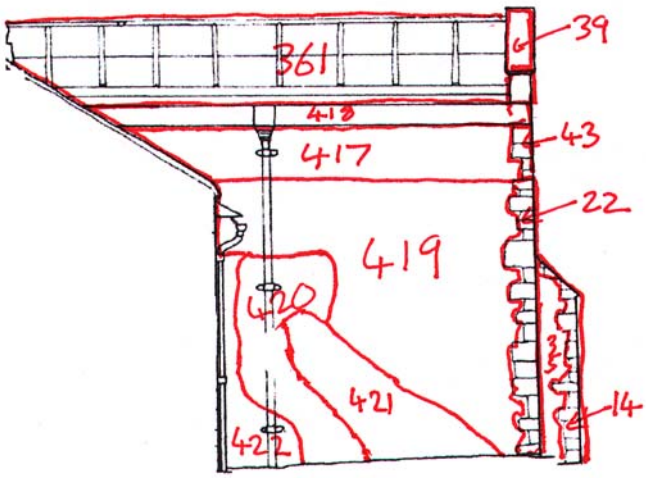

FIGURE 30. THE WEST END OF THE NORTH WALL OF THE NORTH AISLE: ELEVATION S-R AT 1:100.

FIGURE 31. The Stratigraphic Sequence of St. Mary the Virgin Church, Sedgeford.

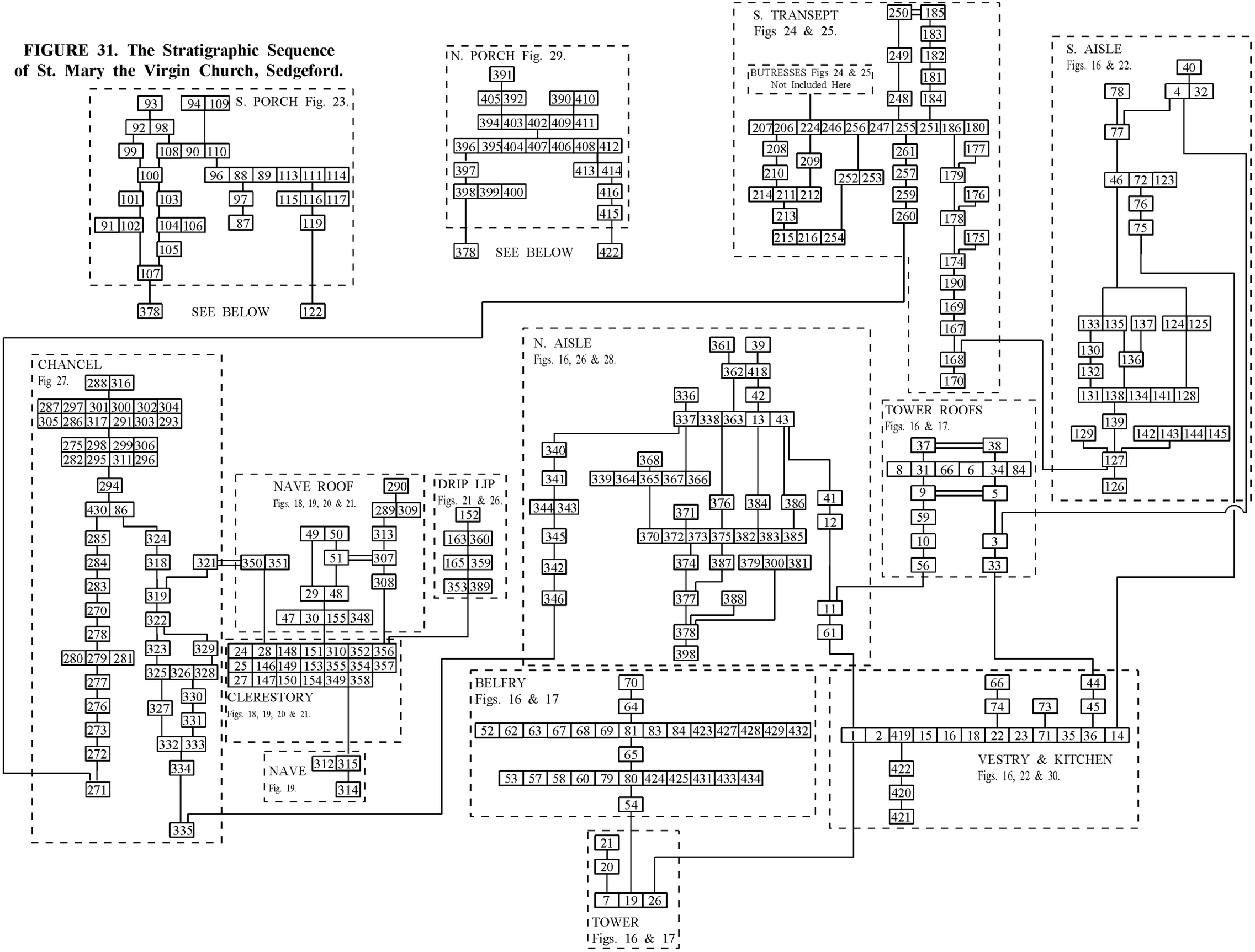

CONCLUSION

There can be no doubt that Edward Harris' work concerning archaeological stratigraphy has revolutionised the recording and interpretation of the stratification encountered during the course of archaeological excavations. By adapting the long established *Laws of Geological Stratigraphy* to archaeological deposits and identifying the additional *Law of Stratigraphical Succession*, he developed a methodology by which the stratigraphic sequence of a site could be determined in a systematic and mathematical way by studying the relationships between individual stratigraphic units. This methodology and its resulting Harris Matrix diagrams have become widely used in archaeology since their invention in the 1970s, however their application has generally been confined to subsurface deposits and not standing buildings. This fact is particularly puzzling when one considers that architectural historians have been analysing buildings in a stratigraphic manner since the early nineteenth century and continue to do so today.

The application of the Harris Matrix method to the analysis of standing buildings has been demonstrated in three published studies in addition to this one with great success, although modifications to the fundamental stratigraphic laws that underpin the interpretation of the stratigraphic relationships are necessary. As has been shown, in order for the method to work one must largely disregard the geologically derived *Laws of Original Horizontality* and *Original Continuity*, favouring in their stead a new *Law of Original Consolidation*. In addition, close attention must be paid to which way is 'up' when applying the *Law of Superposition* to the standing fabric, for buildings are constructed against the natural forces that shape subsurface stratification. The *Law of Stratigraphical Succession* remains unaltered in its application both above and below ground.

The case study has served to demonstrate that it is possible to compile the relative developmental sequence of a building by identifying the individual building elements present and studying the stratigraphic relationships between them. In this case these relationships cannot be definitely ascertained, because the opportunity to completely excavate the building is denied and we must rely solely upon the elevations, but despite this the resultant diagram in Figure 31 offers a comprehensive overview of the building's development. Whilst it is detailed in its sequence, this diagram alone is not sufficient to completely reconstruct the history of the building and as such no account of it has been attempted here. The next phase of SHARP's work will be to take this relative sequence and give it a crucial chronological dimension through correlation with historical records, architectural details and such like.

Figure 31 serves to demonstrate that the Harris Matrix can be used as a tool in the interpretation of the stratigraphy of standing buildings by rationalising the stratigraphic data gathered. As has always been the case with subsurface archaeology, the application of the Harris Matrix is an early step towards the overall interpretation of the chronological development of an archaeological site, and the same is true in the case of standing buildings.

BIBLIOGRAPHY

- Addyman, P.V. and Morris, R. 1976. *The Archaeological Study of Churches*. London: C.B.A.
- Arnell, J.C. 1997. 'Editorial', *Bermuda Journal of Archaeology and Maritime History* 9, v-vi.
- Aston, M. 1985. *Interpreting the Landscape*. London: Batsford.
- Aston, M. 2000. *Mick's Archaeology*. Stroud: Tempus.
- Bahn, P.G. (Ed.). 1996. *The Cambridge Illustrated History of Archaeology*. Cambridge: Cambridge University Press.
- Barker, P. 1993. *Techniques of Archaeological Excavation (Third Edition).* London: Batsford.
- Brown, S. 1998. *Berry Pomeroy Castle*. Exeter: Devon Archaeological Society.
- Brown, G.J. and Muraca, D.F. 1993. 'Phasing stratigraphic sequences at Colonial Williamsburg'. In Harris, E.C., Brown, M.R. & Brown, G.J. (Eds.). *Practices of Archaeological Stratigraphy*. pp.155-166. London: Academic Press.
- Browne, D.M. 1975. *Principles and Practice in Modern Archaeology.* London: Hodder & Stoughton.
- Butler, L.A.S. and Morris, R.K. 1986. *The Anglo-Saxon Church.* London: C.B.A.
- Clarke, H. 1984. *The Archaeology of Medieval England*. Oxford: Basil Blackwell.
- Cramp, R., Tatton-Brown, T., Gem, R. and Parsons, D. 1998. 'St. Mary's Deerhurst - a retrospective', *Church Archaeology* 2, 19-28.
- Davies, M. 1993. 'The Application of the Harris Matrix to the Recording of Standing Structures'. In Harris, E.C., Brown, M.R. & Brown, G.J. (Eds.). *Practices of Archaeological Stratigraphy*. pp.167-180. London: Academic Press.
- Droop, J.P. 1915. *Archaeological Excavation*. Cambridge: Cambridge University Press.
- Frere, J. 1800. 'Account of flint weapons discovered at Hoxne in Suffolk', *Archaeologia* 13, 204-5.
- Greene, K. 1995. *Archaeology: An Introduction (Third Edition).* London: Batsford.
- Harris, E.C. 1975. 'The Stratigraphic Sequence: A Question of Time', *World Archaeology* 7, 109-121.
- Harris, E.C. 1979a. *Principles of Archaeological Stratigraphy (First Edition).* London: Academic Press.
- Harris, E.C. 1979b. 'The Laws of Archaeological Stratigraphy', *World Archaeology* 11, 111-117.
- Harris, E.C. 1989. *Principles of Archaeological Stratigraphy (Second Edition).* London: Academic Press.
- Harris, E.C., Brown, M.R. & Brown, G.J. (Eds.). 1993. *Practices of Archaeological Stratigraphy*. London: Academic Press.
- Harvey, H.M. 1997. 'Structures as Stratified Remains. An 'Excavation' of the Structures of the King's Castle, Bermuda', *Bermuda Journal of Archaeology and Maritime History* 9, 1-64.
- James, J. 1981a. *The Contractors of Chartres: Volume 1*. Australia: Mandorla Publications.

📖 James, J. 1981b. *The Contractors of Chartres: Volume 2*. Australia: Mandorla Publications.

📖 Kenyon, K.M. 1961. *Beginning in Archaeology (Revised Edition).* London: Phoenix House Ltd.

📖 M.O.L.A.S. 1994. *Archaeological Site Manual (Third Edition).* London: Museum of London

📖 Morris, R. 1994. 'Buildings Archaeology'. In Wood, J. (Ed.). *Buildings Archaeology: Applications in Practice*. pp.13-21. Oxford: Oxbow.

📖 Orton, C. 1980. *Mathematics in Archaeology*. London: Collins.

📖 Paice, P. 1991. 'Extensions to the Harris Matrix System to Illustrate Stratigraphic Discussion of an Archaeological Site', *Journal of Field Archaeology* 18, 17-28.

📖 Pyddoke, E. 1961. *Stratification for the Archaeologist.* London: Phoenix House Ltd.

📖 Rahtz, P.A. 1976. *Excavations at St. Mary's Church, Deerhurst, 1971-73*. London: C.B.A.

📖 Rahtz, P.A. and Watts, L. 1997. *St. Mary's Church, Deerhurst, Gloucestershire: Fieldwork, Excavations and Structural Analysis, 1971-1984.* London: Society of Antiquaries

📖 Rodwell, W.J. 1986. 'Anglo-Saxon Church Building: Aspects of Design and Construction'. In Butler, L.A.S. and Morris, R.K. *The Anglo-Saxon Church.* London: C.B.A.

📖 Rodwell, W.J. 1989. *The Archaeology of Religious Places: Churches and Cemeteries in Britain.* Philadelphia: University of Pennsylvania Press.

📖 Rodwell, W.J. and Rodwell, K.A. 1982. 'St. Peter's Church, Barton-Upon-Humber: Excavation and Structural Study 1978-81', *Antiquaries Journal* 62, 283-315.

📖 Rodwell, W.J. and Rodwell, K.A. 1985. *Rivenhall: investigations of a villa, church, and village, 1950-77. Volume 1.* London: C.B.A.

📖 Royal Commission on the Historical Monuments of England. 1996. *Recording Historic Buildings: A Descriptive Specification (Third Edition).* Swindon: RCHME.

📖 Simmons, D.M., Stachiw, M.O. and Worrell, J.E. 1993. 'The Total Site Matrix: Strata and Structure at the Bixby Site'. In Harris, E.C., Brown, M.R. & Brown, G.J. (Eds.). *Practices of Archaeological Stratigraphy.* pp.181-197. London: Academic Press.

📖 Taylor, H.M. and Taylor, J. 1965a. *Anglo-Saxon Architecture Volume 1.* Cambridge: Cambridge University Press.

📖 Taylor, H.M. and Taylor, J. 1965b. *Anglo-Saxon Architecture Volume 2.* Cambridge: Cambridge University Press.

📖 Taylor, H.M. 1972. 'Structural Criticism: A Plea for More Systematic Study of Anglo-Saxon Buildings', *Anglo-Saxon England* 1, 259-273.

📖 Taylor, H.M. 1976. 'The Foundations of Architectural History'. In Addyman, P.V. and Morris, R. *The Archaeological Study of Churches*. pp.3-9. London: C.B.A.

📖 Taylor, H.M. 1978. *Anglo-Saxon Architecture Volume 3.* Cambridge: Cambridge University Press.

📖 Trigger, B.G. 1989. *A History of Archaeological Thought.* Cambridge: Cambridge University Press.

📖 Wheeler, R.E.M. 1943. *Maiden Castle, Dorset*. Oxford: Oxford University Press

📖 Wheeler, R.E.M. 1954. *Archaeology from the Earth*. Oxford: Clarendon Press.

📖 Wood, J. (Ed.). 1994. *Buildings Archaeology: Applications in Practice*. Oxford: Oxbow.

📖 Woodford, A.O. 1965. *Historical Geology*. London: W.H.Freeman and Co.

THE WORLD WIDE WEB

💻 'The Harris Matrix' http://www.harrismatrix.com/home.htm